MERCURY®

GO BOLDLY.™

Operation Maintenance and Installation Manual

8M0145552 417 eng

75/80/90/100/115/115 Pro XS, SeaPro FourStroke

© 2018 Mercury Marine

Welcome

You have selected one of the finest marine power packages available. It incorporates numerous design features to ensure operating ease and durability.

With proper care and maintenance, you will enjoy using this product for many boating seasons. To ensure maximum performance and carefree use, we ask that you thoroughly read this manual.

The Operation and Maintenance Manual contains specific instructions for using and maintaining your product. We suggest that this manual remain with the product for ready reference whenever you are on the water.

Thank you for purchasing one of our products. We sincerely hope your boating will be pleasant!

Mercury Marine, Fond du Lac, Wisconsin, U.S.A.

Name / function:
John Pfeifer, President,
Mercury Marine

Read This Manual Thoroughly

IMPORTANT: If you do not understand any portion of this manual, contact your dealer. Your dealer can also provide a demonstration of actual starting and operating procedures.

Notice

Throughout this publication, and on your power package, warnings, cautions, and notices, accompanied by the International Hazard Symbol ⚠, may be used to alert the installer and user to special instructions concerning a particular service or operation that may be hazardous if performed incorrectly or carelessly. Observe them carefully.

These safety alerts alone cannot eliminate the hazards that they signal. Strict compliance with these special instructions while performing the service, plus common sense operation, are major accident prevention measures.

⚠ WARNING
Indicates a hazardous situation which, if not avoided, could result in death or serious injury.

⚠ CAUTION
Indicates a hazardous situation which, if not avoided, could result in minor or moderate injury.

NOTICE
Indicates a situation which, if not avoided, could result in engine or major component failure.

IMPORTANT: Identifies information essential to the successful completion of the task.

NOTE: *Indicates information that helps in the understanding of a particular step or action.*

IMPORTANT: The operator (driver) is responsible for the correct and safe operation of the boat, the equipment aboard, and the safety of all occupants aboard. We strongly recommend that the operator read this Operation and Maintenance Manual and thoroughly understand the operational instructions for the power package and all related accessories before the boat is used.

California Proposition 65

WARNING: This product can expose you to chemicals including gasoline engine exhaust, which is known to the State of California to cause cancer and birth defects or other reproductive harm. For more information go to www.P65Warnings.ca.gov.

The serial numbers are the manufacturer's keys to numerous engineering details that apply to your Mercury Marine power package. When contacting Mercury Marine about service, **always specify model and serial numbers.**

Descriptions and specifications contained herein were in effect at the time this was approved for printing. Mercury Marine, whose policies are based on continuous improvement, reserves the right to discontinue models at any time or to change specifications or designs without notice and without incurring obligation.

Warranty Message

The product you have purchased comes with a **limited warranty** from Mercury Marine; the terms of the warranty are set forth in the Warranty Manual included with the product. The Warranty Manual contains a description of what is covered, what is not covered, the duration of coverage, how to best obtain warranty coverage, **important disclaimers and limitations of damages**, and other related information. Please review this important information.

Mercury Marine products are designed and manufactured to comply with our own high quality standards, applicable industry standards and regulations, as well as certain emissions regulations. At Mercury Marine every engine is operated and tested before it is boxed for shipment to make sure that the product is ready for use. In addition, certain Mercury Marine products are tested in a controlled and monitored environment, for up to 10 hours of engine run time, in order to verify and make a record of compliance with applicable standards and regulations. All Mercury Marine product, sold as new, receives the applicable limited warranty coverage, whether the engine participated in one of the test programs described above or not.

Copyright and Trademark Information

© MERCURY MARINE. All rights reserved. Reproduction in whole or in part without permission is prohibited.

Alpha, Axius, Bravo One, Bravo Two, Bravo Three, GO BOLDLY., Circle M with Waves Logo, K-planes, Mariner, MerCathode, MerCruiser, Mercury, Mercury with Waves Logo, Mercury Marine, Mercury Precision Parts, Mercury Propellers, Mercury Racing, MotorGuide, OptiMax, Quicksilver, SeaCore, Skyhook, SmartCraft, Sport-Jet, Verado, VesselView, Zero Effort, Zeus, #1 On the Water and We're Driven to Win are registered trademarks of Brunswick Corporation. Pro XS is a trademark of Brunswick Corporation. Mercury Product Protection is a registered service mark of Brunswick Corporation.

Identification Records

Please record the following applicable information:

Outboard		
Engine Model and Horsepower		
Engine Serial Number		
Gear Ratio		
Propeller Number	**Pitch**	**Diameter**
Watercraft Identification Number (WIN) or **Hull Identification Number (HIN)**		**Purchase Date**
Boat Manufacturer	**Boat Model**	**Length**
Exhaust Gas Emissions Certification Number (Europe Only)		

General Information

Boater's Responsibilities.... 1
Before Operating Your Outboard.... 1
Boat Horsepower Capacity.... 1
High-Speed and High-Performance Boat Operation.... 2
Outboard Remote Control Models 2
Remote Steering Notice.... 3
Outboard Mounting Notice.... 3
Propeller Selection.... 4
Lanyard Stop Switch.... 5
Protecting People in the Water.... 7
Passenger Safety Message - Pontoon Boats and Deck Boats.... 8
Wave and Wake Jumping.... 9
Impact with Underwater Hazards.... 10
Exhaust Emissions.... 11
Selecting Accessories for Your Outboard.... 13
Safe Boating Recommendations.... 13
Recording Serial Number.... 16
Specifications 75–115.... 16
Specifications 75–115 SeaPro.... 18
Specifications 115 Pro XS.... 19
Component Identification.... 21

Transporting

Trailering Boat/Outboard.... 22

Fuel and Oil

Fuel Recommendations.... 23
Fuel Additives.... 24
Avoiding Fuel Flow Restriction.... 24
Quick-Disconnect Fuel Hose Fitting.... 24
Low Permeation Fuel Hose Requirement 25
EPA Pressurized Portable Fuel Tank Requirements.... 25
Fuel Demand Valve (FDV) Requirement.... 26
Mercury Marine's Pressurized Portable Fuel Tank.... 26
Filling Fuel Tank.... 27
Engine Oil Recommendations.... 28
Checking and Adding Engine Oil.... 28

Features and Controls

Remote Control Features..... 31
Warning System..... 31
Power Trim and Tilt..... 33
Propeller Steering Torque—Trim Tab Adjustment..... 36

Operation

Important Information..... 38
Operating in Freezing Temperatures..... 39
Operating in Saltwater or Polluted Water..... 39
Operating at High Elevations..... 39
Effects of Elevation and Weather on Performance..... 39
Setting Trim Angle while Running Engine at Idle Speed..... 40
Operating in Shallow Water..... 40
Engine Break-in Procedure..... 41
Starting the Engine..... 41
Gear Shifting..... 44
Stopping the Engine..... 45

Maintenance

Cleaning Care Recommendations..... 46
EPA Emissions Regulations..... 48
Inspection and Maintenance Schedule..... 49
Maintenance Schedule Decal (75–115)..... 51
Flushing the Cooling System..... 53
Top Cowl Removal and Installation..... 54
Flywheel Cover Removal and Installation..... 55
Battery Inspection 55
Fuel System..... 56
Corrosion Control Anode..... 58
Propeller Bore Sleeve Inspection—If Equipped 59
Propeller Replacement..... 60
Spark Plug Inspection and Replacement..... 63
Fuse Replacement..... 65
Lubrication Points..... 66
Checking Power Trim Fluid..... 69
Changing Engine Oil 69
Gearcase Lubrication..... 72

Storage

Storage Preparation....74
Protecting External Outboard Components....74
Protecting Internal Engine Components....75
Gearcase....75
Positioning Outboard for Storage....75
Battery Storage....75

Troubleshooting

Starter Motor Will Not Crank the Engine....76
Engine Will Not Start....76
Engine Runs Erratically....76
Performance Loss....77
Battery Will Not Hold Charge....77

Owner Service Assistance

Service Assistance....78
Ordering Literature....80

Outboard Installation

Mercury Marine Validated Engine Mounting Hardware....82
Accessories Mounted to the Transom Clamp Bracket....82
Important Information....86
Boat Horsepower Capacity....86
Start in Gear Protection....87
Selecting Accessories for Your Outboard....87
Fuel System....87
Installation Specifications....92
Determining Recommended Outboard Mounting Height....93
Drilling Outboard Mounting Holes....94
Lifting Outboard....95
Shipping Bracket Removal....96
Steering Cable - Starboard Side Routed Cable....97
Fastening the Outboard to the Transom....97
Steering Link Rod Fasteners (if equipped)....102
Electrical, Fuel Hose, and Control Cables....104
Trim In Pin....115

Maintenance Log

Maintenance Log..... 116

GENERAL INFORMATION

Boater's Responsibilities

The operator (driver) is responsible for the correct and safe operation of the boat and the safety of its occupants and general public. It is strongly recommended that each operator read and understand this entire manual before operating the outboard.

Be sure that at least one additional person onboard is instructed in the basics of starting and operating the outboard and boat handling in case the driver is unable to operate the boat.

Before Operating Your Outboard

Read this manual carefully. Learn how to operate your outboard properly. If you have any questions, contact your dealer.

Safety and operating information that is practiced, along with using good common sense, can help prevent personal injury and product damage.

This manual as well as safety labels posted on the outboard use the following safety alerts to draw your attention to special safety instructions that should be followed.

⚠ WARNING
Indicates a hazardous situation which, if not avoided, could result in death or serious injury.

⚠ CAUTION
Indicates a hazardous situation which, if not avoided, could result in minor or moderate injury.

NOTICE
Indicates a situation which, if not avoided, could result in engine or major component failure.

Boat Horsepower Capacity

⚠ WARNING
Exceeding the boat's maximum horsepower rating can cause serious injury or death. Overpowering the boat can affect boat control and flotation characteristics or break the transom. Do not install an engine that exceeds the boat's maximum power rating.

GENERAL INFORMATION

Do not overpower or overload your boat. Most boats will carry a required capacity plate indicating the maximum acceptable power and load as determined by the manufacturer following certain federal guidelines. If in doubt, contact your dealer or the boat manufacturer.

U.S. COAST GUARD CAPACITY	
MAXIMUM HORSEPOWER	XXX
MAXIMUM PERSON CAPACITY (POUNDS)	XXX
MAXIMUM WEIGHT CAPACITY	XXX

26777

High-Speed and High-Performance Boat Operation

If your outboard is to be used on a high-speed or high-performance boat with which you are unfamiliar, we recommend that you do not operate it at its high speed capability without first requesting an initial orientation and familiarization demonstration ride with your dealer or an operator experienced with your boat/ outboard combination. For additional information, obtain a copy of our **Hi-Performance Boat Operation** booklet from your dealer, distributor, or Mercury Marine.

Outboard Remote Control Models

The remote control connected to your outboard must be equipped with a start in neutral only protection device. This prevents the engine from starting when the shift is actuated in any position other than neutral.

⚠ WARNING

Starting the engine with the drive in gear can cause serious injury or death. Never operate a boat that does not have a neutral-safety-protection device.

58237

GENERAL INFORMATION

Remote Steering Notice

The steering link rod that connects the steering cable to the engine must be fastened utilizing self-locking nuts. These self-locking nuts must never be replaced with common nuts (nonlocking) as they will work loose and vibrate off, freeing the link rod to disengage.

⚠ WARNING

Improper fasteners or improper installation procedures can result in loosening or disengagement of the steering link rod. This can cause a sudden, unexpected loss of boat control, resulting in serious injury or death due to occupants being thrown within or out of the boat. Always use required components and follow instructions and torque procedures.

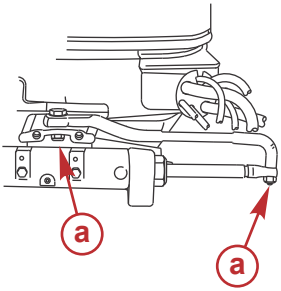

27740

a - Self-locking nuts

Outboard Mounting Notice

⚠ WARNING

Failure to correctly fasten the outboard could result in the outboard propelling off the boat transom resulting in property damage, serious injury, or death. Before operation, the outboard must be correctly installed with the required mounting hardware.

We strongly recommend that your dealer install your outboard and related accessories to ensure proper installation and good performance. If you install the outboard yourself, refer to the **Outboard Installation** section.

The outboard must be secured to the transom with the four 12.7 mm (1/2 in.) diameter mounting bolts and locknuts provided. Install two bolts through the upper set of holes and two bolts through the lower set of holes.

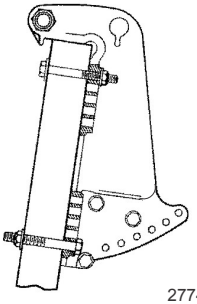

27746

Propeller Selection

For best all around performance from your outboard/boat combination, select a propeller that allows the engine to operate in the upper half of the recommended full throttle RPM range with the boat normally loaded (refer to **General Information - Specifications**). This RPM range allows for better acceleration while maintaining maximum boat speed.

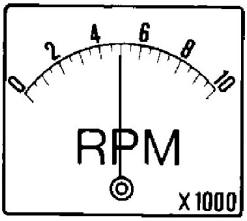

22551

If changing conditions cause the RPM to drop below the recommended range, such as warmer, more humid weather, operation at higher elevations, increased boat load, or a dirty boat bottom/gearcase, a propeller change or cleaning may be required to maintain performance and ensure the outboards durability.

Check full-throttle RPM, using an accurate tachometer, with the engine trimmed out to a balanced-steering condition (steering effort equal in both directions) without causing the propeller to break loose.

Lanyard Stop Switch

The purpose of a lanyard stop switch is to turn off the engine when the operator moves far enough away from the operator's position (as in accidental ejection from the operator's position) to activate the switch. Tiller handle outboards and some remote control units are equipped with a lanyard stop switch. A lanyard stop switch can be installed as an accessory - generally on the dashboard or side adjacent to the operator's position.

A decal near the lanyard stop switch is a visual reminder for the operator to attach the lanyard to their personal flotation device (PFD) or wrist.

The lanyard cord is usually 122–152 cm (4–5 feet) in length when stretched out, with an element on one end made to be inserted into the switch and a clip on the other end for attaching to the operator's PFD or wrist. The lanyard is coiled to make its at-rest condition as short as possible to minimize the likelihood of lanyard entanglement with nearby objects. Its stretched-out length is made to minimize the likelihood of accidental activation should the operator choose to move around in an area close to the normal operator's position. If it is desired to have a shorter lanyard, wrap the lanyard around the operator's wrist or leg, or tie a knot in the lanyard.

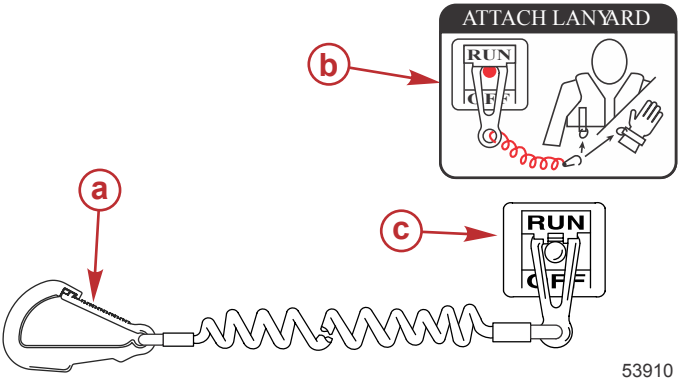

a - Lanyard cord clip
b - Lanyard decal
c - Lanyard stop switch

Read the following Safety Information before proceeding.

GENERAL INFORMATION

Important Safety Information: The purpose of a lanyard stop switch is to stop the engine when the operator moves far enough away from the operator's position to activate the switch. This would occur if the operator accidentally falls overboard or moves within the boat a sufficient distance from the operator's position. Falling overboard and accidental ejections are more likely to occur in certain types of boats such as low sided inflatables, bass boats, high performance boats, and light, sensitive handling fishing boats operated by a hand tiller. Falling overboard and accidental ejections are also likely to occur as a result of poor operating practices such as sitting on the back of the seat or gunwale at planing speeds, standing at planing speeds, sitting on elevated fishing boat decks, operating at planing speeds in shallow or obstacle infested waters, releasing your grip on a steering wheel or tiller handle that is pulling in one direction, drinking alcohol or consuming drugs, or daring high speed boat maneuvers.

While activation of the lanyard stop switch will stop the engine immediately, a boat will continue to coast for some distance depending upon the velocity and degree of any turn at shut down. However, the boat will not complete a full circle. While the boat is coasting, it can cause injury to anyone in the boat's path as seriously as the boat would when under power.

We strongly recommend that other occupants be instructed on proper starting and operating procedures should they be required to operate the engine in an emergency (if the operator is accidentally ejected).

⚠ WARNING

If the operator falls out of the boat, stop the engine immediately to reduce the possibility of serious injury or death from being struck by the boat. Always properly connect the operator to the stop switch using a lanyard.

⚠ WARNING

Avoid serious injury or death from deceleration forces resulting from accidental or unintended stop switch activation. The boat operator should never leave the operator's station without first disconnecting the stop switch lanyard from the operator.

Accidental or unintended activation of the switch during normal operation is also a possibility. This could cause any, or all, of the following potentially hazardous situations:

- Occupants could be thrown forward due to unexpected loss of forward motion - a particular concern for passengers in the front of the boat who could be ejected over the bow and possibly struck by the gearcase or propeller.
- Loss of power and directional control in heavy seas, strong current, or high winds.
- Loss of control when docking.

KEEP THE LANYARD STOP SWITCH AND LANYARD CORD IN GOOD OPERATING CONDITION

Before each use, check to ensure the lanyard stop switch works properly. Start the engine and stop it by pulling the lanyard cord. If the engine does not stop, have the switch repaired before operating the boat.

Before each use, visually inspect the lanyard cord to ensure it is in good working condition and that there are no breaks, cuts, or wear to the cord. Check that the clips on the ends of the cord are in good condition. Replace any damaged or worn lanyard cords.

Protecting People in the Water

WHILE YOU ARE CRUISING

It is very difficult for a person standing or floating in the water to take quick action to avoid a boat heading in his/her direction, even at slow speed.

Always slow down and exercise extreme caution any time you are boating in an area where there might be people in the water.

Whenever a boat is moving (coasting) and the outboard gear shift is in neutral position, there is sufficient force by the water on the propeller to cause the propeller to rotate. This neutral propeller rotation can cause serious injury.

WHILE THE BOAT IS STATIONARY

⚠ WARNING
A spinning propeller, a moving boat, or any solid device attached to the boat can cause serious injury or death to swimmers. Stop the engine immediately whenever anyone in the water is near your boat.

Shift the outboard into neutral and shut off the engine before allowing people to swim or be in the water near your boat.

Passenger Safety Message - Pontoon Boats and Deck Boats

Whenever the boat is in motion, observe the location of all passengers. Do not allow any passengers to stand or use seats other than those designated for traveling faster than idle speed. A sudden reduction in boat speed, such as plunging into a large wave or wake, a sudden throttle reduction, or a sharp change of boat direction, could throw them over the front of the boat. Falling over the front of the boat between the two pontoons will position them to be run over by the outboard.

BOATS HAVING AN OPEN FRONT DECK

No one should ever be on the deck in front of the fence while the boat is in motion. Keep all passengers behind the front fence or enclosure.

Persons on the front deck could easily be thrown overboard or persons dangling their feet over the front edge could get their legs caught by a wave and pulled into the water.

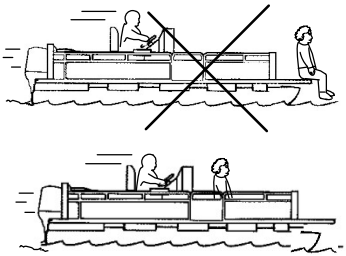

26782

⚠ WARNING

Sitting or standing in an area of the boat not designed for passengers at speeds above idle can cause serious injury or death. Stay back from the front end of deck boats or raised platforms and remain seated while the boat is in motion.

BOATS WITH FRONT MOUNTED, RAISED PEDESTAL FISHING SEATS

Elevated fishing seats are not intended for use when the boat is traveling faster than idle or trolling speed. Sit only in seats designated for traveling at faster speeds.

Any unexpected, sudden reduction in boat speed could result in the elevated passenger falling over the front of the boat.

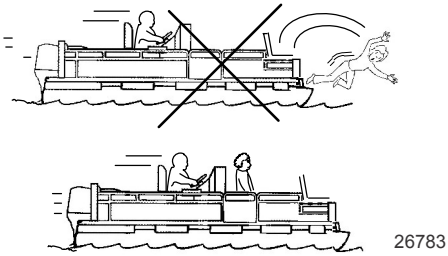

Wave and Wake Jumping

Operating recreational boats over waves and wake is a natural part of boating. However, when this activity is done with sufficient speed to force the boat hull partially or completely out of the water, certain hazards arise, particularly when the boat enters the water.

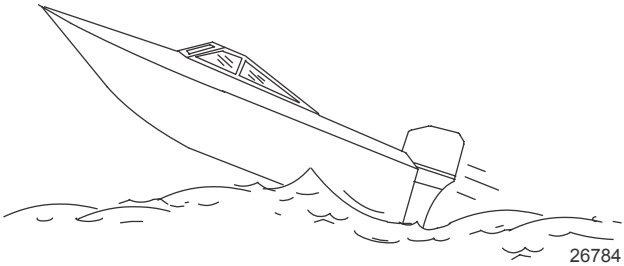

The primary concern is the boat changing direction while in the midst of the jump. In such case, the landing may cause the boat to veer violently in a new direction. Such a sharp change in direction can cause occupants to be thrown out of their seats, or out of the boat.

⚠ WARNING
Wave or wake jumping can cause serious injury or death from occupants being thrown within or out of the boat. Avoid wave or wake jumping whenever possible.

There is another less common hazardous result from allowing your boat to launch off a wave or wake. If the bow of your boat pitches down far enough while airborne, upon water contact it may penetrate under the water surface and submarine for an instant. This will bring the boat to a nearly instantaneous stop and can send the occupants flying forward. The boat may also steer sharply to one side.

Impact with Underwater Hazards

Your outboard is equipped with a hydraulic trim and tilt system that also contains a shock absorbing feature. This feature helps the outboard withstand damage in the case of impact with an underwater object at low to moderate speeds. At higher speeds, the force of the impact may exceed the system's ability to absorb the energy of the impact and cause serious product damage.

No impact protection exists while in reverse. Use extreme caution when operating in reverse to avoid striking underwater objects.

Reduce speed and proceed with caution whenever you drive a boat in shallow water areas or in areas where you suspect underwater obstacles may exist that could be struck by the outboard or the boat bottom. **The most significant action you can take to help reduce injury or impact damage from striking a floating or underwater object is to control the boat speed. Under these conditions, boat speed should be kept to the minimum planing speed, typically 24 to 40 km/h (15 to 25 mph).**

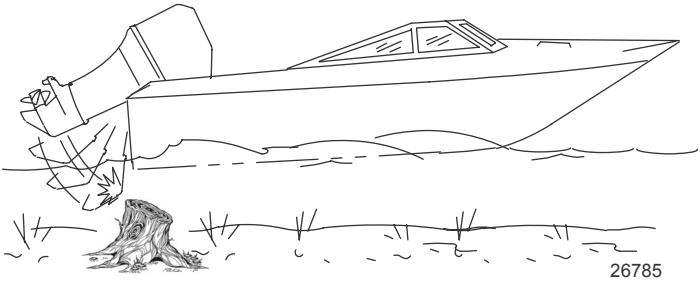

⚠ WARNING

Avoid serious injury or death from all or part of an outboard or drive unit coming into the boat after striking a floating or underwater object. When operating in waters where objects may be at the surface or just under the surface of the water, reduce your speed and keep a vigilant lookout.

Examples of objects that can cause engine damage are dredging pipes, bridge supports, wing dams, trees, stumps, and rocks.

Striking a floating or underwater object could result in any of an infinite number of situations. Some of these situations could yield the following:

- Part of the outboard or the entire outboard could break loose and fly into the boat.
- The boat could move suddenly in a new direction. A sharp change in direction can cause occupants to be thrown out of their seats or out of the boat.
- The boat's speed could rapidly reduce. This will cause occupants to be thrown forward or even out of the boat.

- The outboard or boat could sustain impact damage.

After striking a submerged object, stop the engine as soon as possible and inspect it for any broken or loose parts. If damage is present or suspected, the outboard should be taken to an authorized dealer for a thorough inspection and necessary repair.

The boat should also be checked for any hull fractures, transom fractures, or water leaks. If water leaks are discovered after an impact, immediately activate the bilge pump.

Operating a damaged outboard could cause additional damage to other parts of the outboard or could affect control of the boat. If continued running is necessary, do so at greatly reduced speeds.

⚠ WARNING

Operating a boat or engine with impact damage can result in product damage, serious injury, or death. If the vessel experiences any form of impact, have an authorized Mercury Marine dealer inspect and repair the vessel or power package.

Exhaust Emissions

BE ALERT TO CARBON MONOXIDE POISONING

Carbon monoxide (CO) is a deadly gas that is present in the exhaust fumes of all internal combustion engines, including the engines that propel boats, and the generators that power boat accessories. By itself, CO is odorless, colorless, and tasteless, but if you can smell or taste engine exhaust, you are inhaling CO.

Early symptoms of carbon monoxide poisoning, which are similar to the symptoms of seasickness and intoxication, include headache, dizziness, drowsiness, and nausea.

⚠ WARNING

Inhaling engine exhaust gases can result in carbon monoxide poisoning, which can lead to unconsciousness, brain damage, or death. Avoid exposure to carbon monoxide.

Stay clear from exhaust areas when engine is running. Keep the boat well-ventilated while at rest or underway.

STAY CLEAR OF EXHAUST AREAS

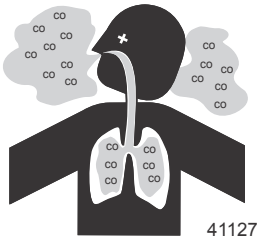

Engine exhaust gases contain harmful carbon monoxide. Avoid areas of concentrated engine exhaust gases. When engines are running, keep swimmers away from the boat, and do not sit, lie, or stand on swim platforms or boarding ladders. While underway, do not allow passengers to be positioned immediately behind the boat (platform dragging, teak/body surfing). This dangerous practice not only places a person in an area of high engine exhaust concentration, but also subjects them to the possibility of injury from the boat propeller.

GOOD VENTILATION

Ventilate the passenger area, open side curtains or forward hatches to remove fumes.

Example of desired air flow through the boat:

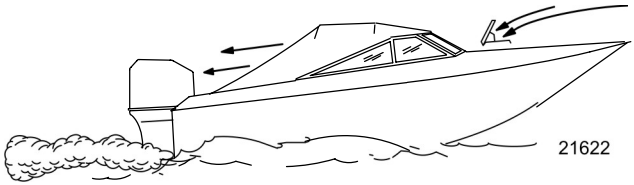

POOR VENTILATION

Under certain running and/or wind conditions, permanently enclosed or canvas enclosed cabins or cockpits with insufficient ventilation may draw in carbon monoxide. Install one or more carbon monoxide detectors in your boat.

Although the occurrence is rare, on a very calm day, swimmers and passengers in an open area of a stationary boat that contains, or is near, a running engine may be exposed to a hazardous level of carbon monoxide.

1. Examples of poor ventilation while the boat is stationary:

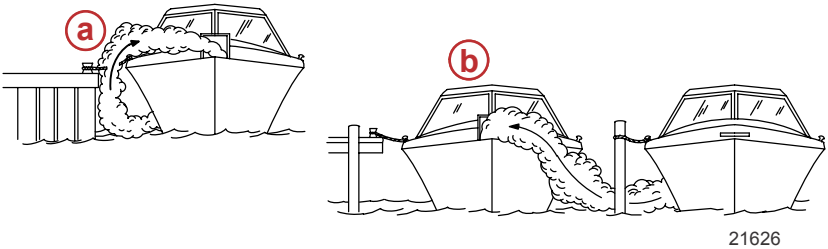

a - Operating the engine when the boat is moored in a confined space
b - Mooring close to another boat that has its engine operating

2. Examples of poor ventilation while the boat is moving:

a - Operating the boat with the trim angle of the bow too high
b - Operating the boat with no forward hatches open (station wagon effect)

Selecting Accessories for Your Outboard

Genuine Mercury Precision or Quicksilver Accessories have been specifically designed and tested for your outboard. These accessories are available from Mercury Marine dealers.

IMPORTANT: Check with your dealer before installing accessories. The misuse of approved accessories or the use of nonapproved accessories can damage the product.

Some accessories not manufactured or sold by Mercury Marine are not designed to be safely used with your outboard or outboard operating system. Read the installation, operation and maintenance manuals for all your selected accessories.

Refer to **Outboard Installation - Accessories Mounted to the Transom Clamp Bracket** for important information on mounting accessories to the transom clamp bracket.

Safe Boating Recommendations

To safely enjoy the waterways, familiarize yourself with local and all other governmental boating regulations and restrictions and consider the following suggestions.

GENERAL INFORMATION

Know and obey all nautical rules and laws of the waterways.

- We recommend that all powerboat operators complete a boating safety course. In the U.S., the U.S. Coast Guard Auxiliary, the Power Squadron, the Red Cross, and your state or provincial boating law enforcement agency provide courses. For more information in the U.S., call the Boat U.S. Foundation at 1-800-336-BOAT (2628).

Perform safety checks and required maintenance.

- Follow a regular schedule and ensure that all repairs are properly made.

Check safety equipment onboard.

- Here are some suggestions of the types of safety equipment to carry when boating:
  - ☐ Approved fire extinguishers
  - ☐ Signal devices: flashlight, rockets or flares, flag, and whistle or horn
  - ☐ Tools necessary for minor repairs
  - ☐ Anchor and extra anchor line
  - ☐ Manual bilge pump and extra drain plugs
  - ☐ Drinking water
  - ☐ Radio
  - ☐ Paddle or oar
  - ☐ Spare propeller, thrust hubs, and an appropriate wrench
  - ☐ First aid kit and instructions
  - ☐ Waterproof storage containers
  - ☐ Spare operating equipment, batteries, bulbs, and fuses
  - ☐ Compass and map or chart of the area
  - ☐ Personal flotation device (one per person onboard)

Watch for signs of weather change and avoid foul weather and rough-sea boating.

Tell someone where you are going and when you expect to return.

Passenger boarding.

- Stop the engine whenever passengers are boarding, unloading, or are near the back (stern) of the boat. Shifting the drive unit into neutral is not sufficient.

Use personal flotation devices.

- Federal law requires that there be a U.S. Coast Guard-approved life jacket (personal flotation device), correctly sized and readily accessible for every person onboard, plus a throwable cushion or ring. We strongly advise that everyone wear a life jacket at all times while in the boat.

Prepare other boat operators.

- Instruct at least one person onboard in the basics of starting and operating the engine and boat handling in case the driver becomes disabled or falls overboard.

Do not overload your boat.

- Most boats are rated and certified for maximum load (weight) capacities (refer to your boat's capacity plate). Know your boat's operating and loading limitations. Know if your boat will float if it is full of water. When in doubt, contact your authorized Mercury Marine dealer or the boat manufacturer.

Ensure that everyone in the boat is properly seated.

- Do not allow anyone to sit or ride on any part of the boat that was not intended for such use. This includes the backs of seats, gunwales, transom, bow, decks, raised fishing seats, and any rotating fishing seat. Passengers should not sit or ride anywhere that sudden unexpected acceleration, sudden stopping, unexpected loss of boat control, or sudden boat movement could cause a person to be thrown overboard or into the boat. Ensure that all passengers have a proper seat and are in it before any boat movement.

Never operate a boat while under the influence of alcohol or drugs. It is the law.

- Alcohol or drugs can impair your judgment and greatly reduce your ability to react quickly.

Know your boating area and avoid hazardous locations.

Be alert.

- The operator of the boat is responsible by law to maintain a proper lookout by sight and hearing. The operator must have an unobstructed view particularly to the front. No passengers, load, or fishing seats should block the operator's view when the boat is above idle or planing transition speed. Watch out for others, the water, and your wake.

Never drive your boat directly behind a water-skier.

- Your boat traveling at 40 km/h (25 mph) will overtake a fallen skier who is 61 m (200 ft) in front of you in five seconds.

Watch fallen skiers.

- When using your boat for waterskiing or similar activities, always keep a fallen or down skier on the operator's side of the boat while returning to attend to the skier. The operator should always have the down skier in sight and never back up to the skier or anyone in the water.

Report accidents.

- Boat operators are required by law to file a boating accident report with their state boating law enforcement agency when their boat is involved in certain boating accidents. A boating accident must be reported if 1) there is loss of life or probable loss of life, 2) there is personal injury requiring medical treatment beyond first aid, 3) there is damage to boats or other property where the damage value exceeds $500.00, or 4) there is complete loss of the boat. Seek further assistance from local law enforcement.

Recording Serial Number

It is important to record this number for future reference. The serial number is located on the outboard, as shown.

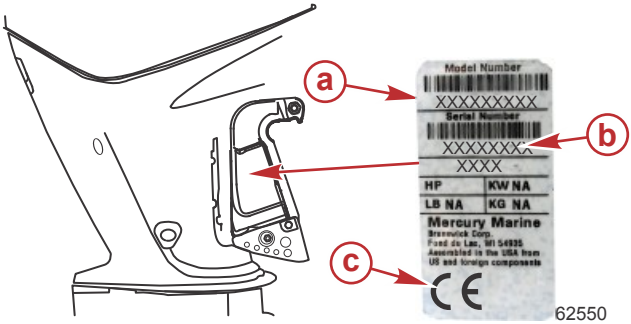

a - Model designation
b - Serial number
c - Certified Europe Insignia (as applicable)

Specifications 75–115

NOTE: 80 and 100 HP are international models.

Models	75	80	90	100	115
Horsepower	75	80	90	100	115
Kilowatts	55.0	59.0	66.0	74.0	85.0
Full throttle RPM range	4500–5500		5000–6000		
Idle speed in neutral gear cold warm-up	700–800 RPM				
Idle speed in neutral gear at operating temperature	700 RPM				

GENERAL INFORMATION

Models	75	80	90	100	115
Idle charging compensation *	700–800 RPM				
Troll control RPM range (accessory)	550–1000				
Number of cylinders	4				
Piston displacement	2,061 cc (125.8 cid)				
Cylinder bore	90 mm (3.54 in.)				
Stroke	81 mm (3.19 in.)				
Recommended spark plug	NGK ZFR5F				
Spark plug gap	0.8 mm (0.032 in.)				
Spark plug hex size	16 mm				
Valve clearance (cold)					
Intake valve	0.050–0.102 mm (0.002–0.004 in.)				
Exhaust valve	0.128–0.179 mm (0.005–0.007 in.)				
Gear ratio	Standard 2.07:1				
	Command Thrust 2.38:1				
Gearcase lubricant capacity	Standard 800 ml (27.1 fl oz)				
	Command Thrust Right-hand 810 ml (27.4 fl oz) Left-hand 790 ml (26.7 fl oz)				
Recommended gasoline	Refer to **Fuel and Oil**				
Recommended oil	Refer to **Fuel and Oil**				
Engine oil capacity with oil filter replacement	5.2 liter (5.5 US qt)				
Battery rating	1000 marine cranking amps (MCA), 800 cold cranking amps (CCA), or 65 amp hour (Ah)				
Emission control system	Electronic engine control (EC)				

Models	75	80	90	100	115
Sound at drivers ear (ICOMIA 39-94) dBA	79.2				

* The idle charging compensation RPM may automatically increase up to 800 RPM to compensate for a low battery charge condition. The increased idle RPM will charge the battery at a higher rate. Activating the troll control (optional accessory) will override this low battery charge condition feature.

Specifications 75–115 SeaPro

Models	75	90	115
Horsepower	75	90	115
Kilowatts	55.0	66.0	85.0
Full throttle RPM range	5000–5500		
Idle speed in neutral gear cold warm-up	700–800 RPM		
Idle speed in neutral gear at operating temperature	700 RPM		
Idle charging compensation *	700–800 RPM		
Troll control RPM range (accessory)	550–1000		
Number of cylinders	4		
Piston displacement	2,061 cc (125.8 cid)		
Cylinder bore	90 mm (3.54 in.)		
Stroke	81 mm (3.19 in.)		
Recommended spark plug	NGK ZFR5F		
Spark plug gap	0.8 mm (0.032 in.)		
Spark plug hex size	16 mm		
Valve clearance (cold)			
Intake valve	0.050–0.102 mm (0.002–0.004 in.)		
Exhaust valve	0.128–0.179 mm (0.005–0.007 in.)		
Gear ratio	Command Thrust 2.38:1		

Models	75	90	115
Gearcase lubricant capacity	Command Thrust Right-hand 810 ml (27.4 fl oz) Left-hand 790 ml (26.7 fl oz)		
Recommended gasoline	Refer to **Fuel and Oil**		
Recommended oil	Refer to **Fuel and Oil**		
Engine oil capacity with oil filter replacement	5.2 liter (5.5 US qt)		
Battery rating	1000 marine cranking amps (MCA), 800 cold cranking amps (CCA), or 65 amp hour (Ah)		
Emission control system	Electronic engine control (EC)		
Sound at drivers ear (ICOMIA 39-94) dBA	79.2		

* The idle charging compensation RPM may automatically increase up to 800 RPM to compensate for a low battery charge condition. The increased idle RPM will charge the battery at a higher rate. Activating the troll control (optional accessory) will override this low battery charge condition feature.

Specifications 115 Pro XS

Models	115 Pro XS	
Horsepower	115	
Kilowatts	85.0	
Full throttle RPM range	5300–6300	
Idle speed	In neutral gear cold warm-up	700–800 RPM
	In neutral gear at operating temperature	700 RPM
	Idle charging compensation *	700–800 RPM
Troll control RPM range (accessory)	550–1000	
Number of cylinders	4	
Piston displacement	2,061 cc (125.8 cid)	

GENERAL INFORMATION

Models	115 Pro XS
Cylinder bore	90 mm (3.54 in.)
Stroke	81 mm (3.19 in.)
Recommended spark plug	NGK ZFR5F
Spark plug gap	0.8 mm (0.032 in.)
Spark plug hex size	16 mm
Valve clearance (cold)	
Intake valve	0.050–0.102 mm (0.002–0.004 in.)
Exhaust valve	0.128–0.179 mm (0.005–0.007 in.)
Gear ratio	Standard 2.07:1
	Command Thrust 2.38:1
Gearcase lubricant capacity	Standard 800 ml (27.1 fl oz)
	Command Thrust Right-hand 810 ml (27.4 fl oz) Left-hand 790 ml (26.7 fl oz)
Recommended gasoline	Refer to **Fuel and Oil**
Recommended oil	Refer to **Fuel and Oil**
Engine oil capacity with oil filter replacement	5.2 liter (5.5 US qt)
Battery rating	1000 marine cranking amps (MCA), 800 cold cranking amps (CCA), or 65 amp hour (Ah)
Emission control system	Electronic engine control (EC)
Sound at drivers ear (ICOMIA 39-94) dBA	79.2

* The idle charging compensation RPM may automatically increase up to 800 RPM to compensate for a low battery charge condition. The increased idle RPM will charge the battery at a higher rate. Activating the troll control (optional accessory) will override this low battery charge condition feature.

Component Identification

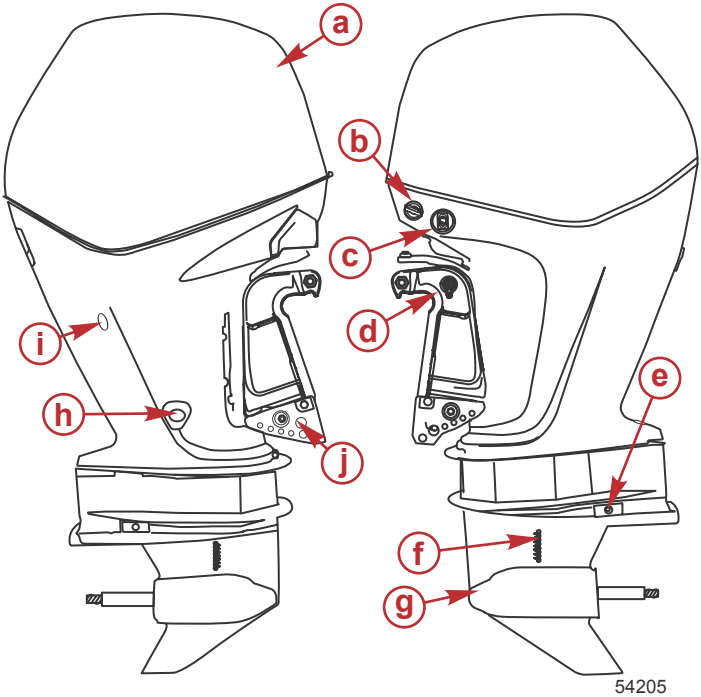

a - Top cowl
b - Engine flush
c - Auxiliary tilt switch
d - Tilt bracket knob
e - Anode
f - Cooling water intake holes
g - Gearcase
h - Engine oil drain
i - Water pump indicator hole
j - Manual release for trim system

Trailering Boat/Outboard

Trailer your boat with the outboard tilted down in a vertical operating position.

If additional ground clearance is required, the outboard should be tilted up using an accessory outboard support device. Refer to your local dealer for recommendations. Additional clearance may be required for railroad crossings, driveways, and trailer bouncing.

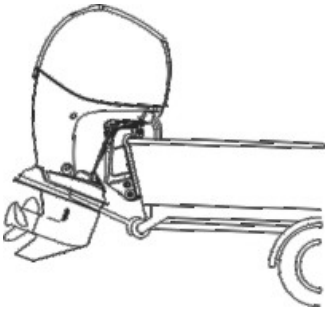

47333

IMPORTANT: Do not rely on the power trim/tilt system or tilt support lever to maintain proper ground clearance for trailering. The outboard tilt support lever is not intended to support the outboard for trailering.

Shift the outboard to forward gear. This prevents the propeller from spinning freely.

FUEL AND OIL

Fuel Recommendations

IMPORTANT: Use of improper fuel can damage your engine. Engine damage resulting from the use of improper fuel is considered misuse of the engine. Damages caused from the use of improper fuel is not covered under the limited warranty.

FUEL RATINGS

Mercury Marine engines will operate satisfactorily when using a major brand of unleaded gasoline meeting the following specifications:

USA and Canada - having a posted pump octane rating of 87 (R+M)/2 minimum. Premium gasoline (92 [R+M]/2 octane) is also acceptable. Do not use leaded gasoline.

Outside USA and Canada - having a posted pump octane rating of 90 RON minimum. Premium gasoline (98 RON) is also acceptable. If unleaded gasoline is not available, use a major brand of leaded gasoline.

USING BUTANOL FUEL BLENDS (USA ONLY)

Butanol fuel blends up to 16 percent that meet Mercury published fuel requirements, are an acceptable substitute for unleaded gasoline. Contact your boat manufacturer for specific recommendations on your boat's fuel system components (fuel tanks, fuel lines, and fittings).

USING REFORMULATED (OXYGENATED) GASOLINES (USA ONLY)

Reformulated gasoline is required in certain areas of the USA. The two types of oxygenates used in these fuels are alcohol (ethanol) or ether (MTBE or ETBE). If ethanol is the oxygenate that is used in the gasoline in your area, refer to **Gasolines Containing Alcohol**.

GASOLINES CONTAINING ALCOHOL

If the gasoline in your area contains either methanol (methyl alcohol) or ethanol (ethyl alcohol), you should be aware of certain adverse effects that can occur. These adverse effects are more severe with methanol. Increasing the percentage of alcohol in the fuel can also worsen these adverse effects.

Alcohol in gasoline can absorb moisture from the air, causing the water and the alcohol to separate from the gasoline in the fuel tank.

The fuel system components on your Mercury Marine engine will withstand up to 10% alcohol content in the gasoline. We do not know what percentage your boat's fuel system will withstand. Contact your boat manufacturer for specific recommendations on the boat's fuel system components (fuel tanks, fuel lines, and fittings).

Be aware that gasoline containing alcohol may cause increased:

- Corrosion of metal parts
- Deterioration of rubber or plastic parts
- Fuel permeation through rubber fuel lines
- Starting and operating difficulties

FUEL AND OIL

⚠ WARNING

Fuel leakage is a fire or explosion hazard, which can cause serious injury or death. Periodically inspect all fuel system components for leaks, softening, hardening, swelling, or corrosion, particularly after storage. Any sign of leakage or deterioration requires replacement before further engine operation.

IMPORTANT: If you use gasoline that contains or might contain alcohol, you must increase the frequency of inspection for leaks and abnormalities.

IMPORTANT: When operating a Mercury Marine engine on gasoline containing alcohol, storage of gasoline in the fuel tank for long periods should be avoided. Long periods of storage, common to boats, create unique problems. In cars, alcohol-blend fuels normally are consumed before they can absorb enough moisture to cause trouble, but boats often sit idle long enough for phase separation to take place. In addition, internal corrosion may take place during storage if alcohol has washed protective oil films from internal components.

Fuel Additives

To minimize carbon deposit buildup in the engine, it is recommended to add Mercury or Quicksilver Quickstor fuel stabilizer additive to the engine's fuel at each tank fill throughout the boating season. Use additive as directed on container.

Avoiding Fuel Flow Restriction

IMPORTANT: Adding components to the fuel supply system (filters, valves, fittings, etc.) may restrict the fuel flow. This may cause engine stalling at low speed, and/or a lean fuel condition at high RPM that could cause engine damage.

Quick-Disconnect Fuel Hose Fitting

⚠ WARNING

Fuel is flammable and explosive. Ensure that the key switch is off and the lanyard is positioned so that the engine cannot start. Do not smoke or allow sources of spark or open flame in the area while servicing. Keep the work area well ventilated and avoid prolonged exposure to vapors. Always check for leaks before attempting to start the engine, and wipe up any spilled fuel immediately.

IMPORTANT: The fuel line quick-disconnect fuel hose fitting is not equipped with a check valve. Fuel will be present at the connection and may drain from the hose when disconnected. Ensure there is a suitable container ready when disconnecting the fuel line from the engine. Follow all fuel handling safety precautions. Wipe up spilled fuel and dispose of according to local laws and regulation.

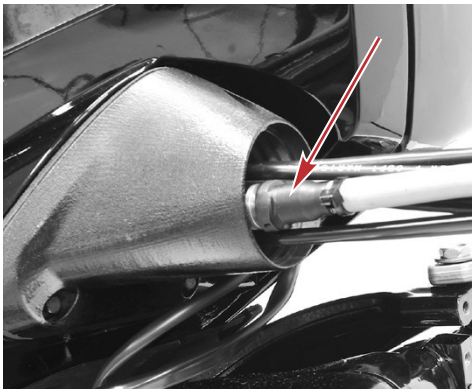

53883

Quick-disconnect fuel hose fitting

Low Permeation Fuel Hose Requirement

Required for outboards manufactured for sale, sold, or offered for sale in the United States.

- The Environmental Protection Agency (EPA) requires that any outboard manufactured after January 1, 2009, must use low permeation fuel hose for the primary fuel hose connecting the fuel tank to the outboard.
- Low permeation hose is USCG Type B1-15 or Type A1-15, defined as not exceeding 15 g/m²/24 h with CE 10 fuel at 23 °C as specified in SAE J 1527 - marine fuel hose.

EPA Pressurized Portable Fuel Tank Requirements

The Environmental Protection Agency (EPA) requires portable fuel systems that are produced after January 1, 2011, for use with outboard engines to remain fully sealed (pressurized) up to 34.4 kPa (5.0 psi). These tanks may contain the following:

- An air inlet that opens to allow air to enter as the fuel is drawn out of the tank.
- An air outlet that opens (vents) to the atmosphere if pressure exceeds 34.4 kPa (5.0 psi).

Fuel Demand Valve (FDV) Requirement

Whenever a pressurized fuel tank is used, a fuel demand valve is required to be installed in the fuel hose between the fuel tank and the engine. The fuel demand valve prevents pressurized fuel from entering the engine and causing a fuel system overflow or possible fuel spillage.

The fuel demand valve has a manual release. The manual release can be used (pushed in) to open (bypass) the valve in case of a fuel blockage in the valve.

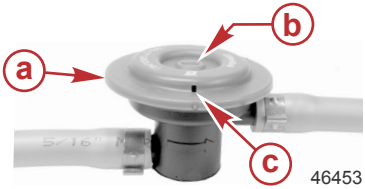

a - Fuel demand valve - installed in the fuel hose between the fuel tank and the engine
b - Manual release
c - Vent/water drain holes

Mercury Marine's Pressurized Portable Fuel Tank

Mercury Marine has created a new portable pressurized fuel tank that meets the preceding EPA requirements. These fuel tanks are available as an accessory or are provided with certain portable outboard models.

SPECIAL FEATURES OF THE PORTABLE FUEL TANK

- The fuel tank has a two-way valve which allows air to enter the tank as the fuel is drawn to the engine, and also opens to vent to the atmosphere if internal pressure in the tank exceeds 34.4 kPa (5.0 psi). A hissing noise may be heard as the tank vents to the atmosphere. This is normal.
- The fuel tank includes a fuel demand valve that prevents pressurized fuel from entering the engine and causing a fuel system overflow or possible fuel spillage.
- When installing the fuel tank cap, turn the cap to the right until you hear a click. This signals that the fuel cap is fully seated. A built-in device prevents overtightening.
- The fuel tank has a manual vent screw which should be closed for transportation and open for operation and cap removal.

Since sealed fuel tanks are not vented, they will expand and contract as the fuel expands and contracts during heating and cooling cycles of the outside air. This is normal.

REMOVING THE FUEL CAP

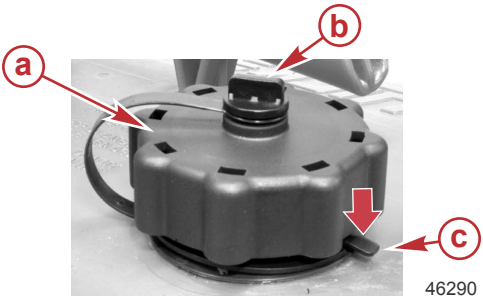

a - Fuel cap
b - Manual vent screw
c - Tab lock

IMPORTANT: Contents may be under pressure. Rotate the fuel cap 1/4 turn to relieve pressure before opening.

1. Open the manual vent screw on top of the fuel cap.
2. Turn the fuel cap until it contacts the tab lock.
3. Press down on the tab lock. Rotate the fuel cap 1/4 turn to relieve the pressure.
4. Press down on the tab lock again and remove the cap.

DIRECTIONS FOR USING THE PRESSURIZED PORTABLE FUEL TANK

1. When installing the fuel tank cap, turn the cap to the right until you hear a click. This signals that the fuel cap is fully seated. A built-in device prevents overtightening.
2. Open the manual vent screw on top of the cap for operation and cap removal. Close the manual vent screw for transportation.
3. For fuel hoses that have quick disconnects, disconnect the fuel line from the engine or fuel tank when not in use.
4. Follow **Filling Fuel Tank** instructions for fueling.

Filling Fuel Tank

⚠ WARNING

Avoid serious injury or death from a gasoline fire or explosion. Use caution when filling fuel tanks. Always stop the engine and do not smoke or allow open flames or sparks in the area while filling fuel tanks.

Fill the fuel tanks outdoors away from heat, sparks, and open flames.

Remove the portable fuel tanks from the boat to fill them.

Always stop the engine before filling the tanks.

Do not completely fill the fuel tanks. Leave approximately 10% of the tank volume unfilled. Fuel will expand in volume as its temperature rises and can leak under pressure if the tank is completely filled.

FUEL AND OIL

PORTABLE FUEL TANK PLACEMENT IN THE BOAT

Place the fuel tank in the boat so the vent is higher than the fuel level under normal boat operating conditions.

Engine Oil Recommendations

Mercury or Quicksilver NMMA FC-W or NMMA FC-W catalyst compatible certified SAE 10W-30 4-Stroke Marine Engine Oil is recommended for general, all-temperature use. As optional choices, Mercury or Quicksilver NMMA FC-W SAE 25W-40 Mineral Marine 4-Stroke Engine Oil or SAE 25-W40 Synthetic Blend Marine 4-Stroke Engine Oil may be used. If the recommended Mercury or Quicksilver NMMA FC-W certified oils are not available, a major outboard manufacturer's brand of NMMA FC-W certified 4-Stroke outboard oil of similar viscosity may be used.

IMPORTANT: The use of nondetergent oils, multiviscosity oils (other than Mercury or Quicksilver NMMA FC-W certified oil or a major brand NMMA FC-W certified oil), low quality oils, or oils that contain solid additives are not recommended.

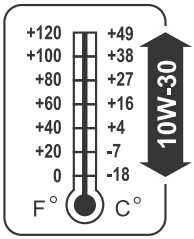

5.2 L (5.5 U.S. qt)

58247

Checking and Adding Engine Oil

IMPORTANT: Do not overfill. Tilt outboard out/up past vertical for approximately one minute to allow trapped oil to drain back to the oil sump. Tilt outboard to vertical (not tilted) position when checking engine oil. For accurate readings, check oil only when engine is cold or after engine has not run for at least an hour.

1. Before starting (cold engine) tilt outboard out/up past vertical to allow trapped oil to drain back to the oil sump. Allow outboard to remain tilted for approximately one minute.
2. Tilt outboard to vertical operating position.
3. Remove the top cowl. Refer to **Maintenance - Top Cowl Removal and Installation**.

4. Pull out the dipstick. Wipe the dipstick end with a clean rag or towel and push it back in all the way.
5. Pull the dipstick back out again and observe the oil level. Oil should be in the operating range (crosshatched region).

IMPORTANT: Do not try to fill the oil level to the top of the operating range (crosshatched region). Oil level is correct as long as it appears in the operating range (crosshatched region).

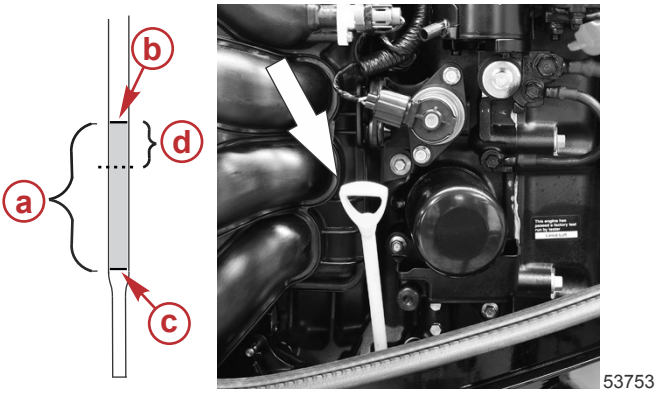

53753

a - Oil level operating range
b - Top bar
c - Bottom bar
d - Upper 1/3 level

6. If the oil level is below the operating range (crosshatched region), remove the oil filler cap and add approximately 500 ml (16 oz) of the specified outboard motor oil. Allow a few minutes for the added oil to drain to the oil sump and check the level on the dipstick. Repeat the process until the oil level is on the operating range (crosshatched region). Do not try to fill to the upper end of the operating range (crosshatched region).

53755

IMPORTANT: Inspect oil for signs of contamination. Oil contaminated with water will have a milky color to it; oil contaminated with fuel will have a strong fuel smell. If contaminated oil is noticed, have the engine checked by your dealer.

7. Push the dipstick back in all the way.
8. Install the oil fill cap hand-tight.
9. Install the top cowl.

Remote Control Features

Your boat may be equipped with one of the Mercury Precision or Quicksilver remote controls shown. If not, consult your dealer for a description of the functions and operations of the remote control.

- **a -** Trim/tilt switch – Refer to **Power Trim and Tilt**
- **b -** Ignition key switch – OFF, ON, START
- **c -** Throttle only button – Refer to **Operation – Starting the Engine**
- **d -** Safety lanyard switch

Warning System

WARNING HORN SIGNALS

When the key switch is turned to the "ON" position, the horn will turn on for a moment as a test to indicate the horn is working.

There are two types of warning horns to alert the operator of an active problem within the engine's operating system.

1. **Continuous six second beep:** Indicates a critical engine condition. Depending on the condition, the Engine Guardian system may engage and protect the engine by limiting its power. You should return to port immediately and contact your servicing dealer.
2. **Intermittent short beeps for six seconds:** Indicates a noncritical engine condition. This condition does not require immediate attention. You may continue using your boat, however, depending on the nature of the problem, the engine's power may be limited by the Engine Guardian system (see **Engine Guardian System** following) to protect the engine. You should contact your servicing dealer at your earliest convenience.

It is important to note that in either of the above scenarios, the horn will only sound one time. If you key the engine off and restart it, the horn will sound again, one time, if the fault is still present. For visual display of the specific engine functions and additional engine data, refer to **SmartCraft Product** information, following.

A few of the noncritical conditions indicated by the intermittent short beeps for six seconds can be corrected by the operator. These operator correctable conditions are as follows:

- Water in the boat mounted water separating fuel filter (optional accessory). Refer to the instructions supplied with the accessory kit.
- Cooling system (water pressure or engine temperature) problem. Stop the engine and check the water intake holes in the lower unit for obstruction.
- Low engine oil level. Refer to **Fuel and Oil – Checking and Adding Engine Oil**.

ENGINE GUARDIAN SYSTEM

The Engine Guardian system monitors the critical sensors on the engine for any early indications of problems. Engine Guardian is functional whenever your engine is operating, so you never have to be concerned about whether or not you are protected. The system will respond to a problem by sounding the warning horn for six seconds and/or reducing engine power in order to provide engine protection.

If Engine Guardian has been activated, reduce the engine speed. The problem will need to be identified and corrected. The system must be reset before the engine will operate at higher speeds. Moving the throttle lever back to the idle position will reset the Engine Guardian system. If the Engine Guardian system has determined the reset has not corrected the problem, Engine Guardian will remain activated, limiting the throttle. The problem must be identified and corrected before Engine Guardian will allow the engine to reach a normal operating RPM.

OVERSPEED REV LIMIT

The overspeed rev limit is set at an RPM greater than the operating range. In the event that the engine is operated at an RPM greater than or equal to the overspeed limit, the PCM does not allow the engine to maintain the power requested by the operator. Refer to **Specifications** to determine this engine's RPM limit.

Upon reaching the beginning of the rev limit, Engine Guardian will cut-out the ignition to specific cylinders. If the operator does not reduce engine speed, Engine Guardian will cut-out the ignition to all the cylinders. There is no audible warning while Engine Guardian overspeed limit is active.

To reset the Engine Guardian protection:

1. Completely reduce the throttle for three seconds.
2. Engage the throttle. If the engine does not respond, repeat step one.

SMARTCRAFT PRODUCT

A Mercury SmartCraft System instrument package can be purchased for this outboard. A few of the functions the instrument package will display are engine RPM, coolant temperature, oil pressure, water pressure, battery voltage, fuel consumption, and engine operating hours.

The SmartCraft instrument package will also aid in Engine Guardian diagnostics. The SmartCraft instrument package will display critical engine alarm data and potential problems.

Power Trim and Tilt

The outboard has a trim/tilt control called power trim. This enables the operator to easily adjust the position of the outboard by pressing the trim switch. Moving the outboard in closer to the boat transom is called trimming in or down. Moving the outboard further away from the boat transom is called trimming out or up. The term trim generally refers to the adjustment of the outboard within the first 20° range of travel. This is the range used while operating the boat on plane. The term tilt is generally used when referring to adjusting the outboard further up out of the water. With the engine turned off and ignition switch turned on, the outboard can be tilted out of the water. At low idle speed, the outboard can also be tilted up past the trim range to permit, for example, shallow water operation.

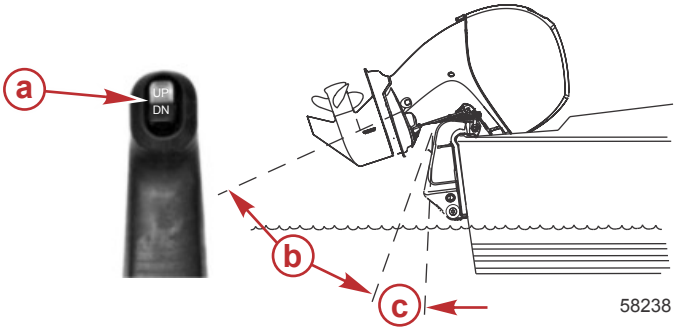

a - Trim switch
b - Tilt range
c - Trim range

POWER TRIM OPERATION

With most boats, operating around the middle of the trim range will give satisfactory results. However, to take full advantage of the trimming capability there may be times when you choose to trim your outboard all the way in or out. Along with an improvement in some performance aspects comes a greater responsibility for the operator, and this is being aware of some potential control hazards.

The most significant control hazard is a pull or torque that can be felt on the steering wheel or tiller handle. This steering torque results from the outboard being trimmed so the propeller shaft is not parallel to the water surface.

⚠ WARNING

Trimming the outboard beyond a neutral steering condition may result in a pull on the steering wheel or tiller handle and loss of boat control. Maintain control of the boat if trimming beyond a neutral steering condition.

Consider the following lists carefully.

1. Trimming in or down can:
   - Lower the bow
   - Result in quicker planing off, especially with a heavy load or a stern heavy boat
   - Generally improve the ride in choppy water
   - Increase steering torque or pull to the right (with the normal right-hand rotation propeller)
   - In excess, can lower the bow of some boats to a point where they begin to plow with their bow in the water while on plane. This can result in an unexpected turn in either direction (called bow steering or oversteering) if any turn is attempted, or if a significant wave is encountered.
2. Trimming out or up can:
   - Lift the bow higher out of the water
   - Generally increase top speed
   - Increase clearance over submerged objects or a shallow bottom
   - Increase steering torque or pull to the left at a normal installation height (with the normal right-hand rotation propeller)
   - In excess, can cause boat porpoising (bouncing) or propeller ventilation
   - Cause engine overheating if any cooling water intake holes are above the waterline

TILTING OPERATION

To tilt outboard, shut off the engine and press the trim/tilt switch or auxiliary tilt switch to the up position. The outboard will tilt up until the switch is released or it reaches its maximum tilt position.

1. Engage the tilt support lever by rotating the knob to bring the support lever upward.
2. Lower the outboard to rest on the tilt support lever.

3. Disengage the tilt support lever by raising the outboard off the support lever and rotating the lever down. Lower the outboard.

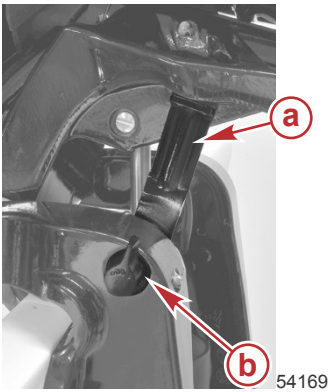

54169

a - Tilt support lever
b - Knob

MANUAL TILTING

If the outboard cannot be tilted using the power trim/tilt switch, the outboard can be manually tilted.

NOTE: *The manual tilt release valve must be tightened before operating the outboard to prevent the outboard from tilting up during reverse operation.*

Turn out the manual tilt release valve three turns counterclockwise. This allows manual tilting of the outboard. Tilt the outboard to the desired position and tighten the manual tilt release valve.

54177

AUXILIARY TILT SWITCH

This switch can be used to tilt the outboard up or down using the power trim system.

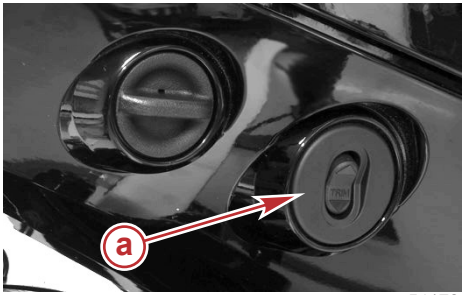

54178

a - Auxiliary tilt switch

SHALLOW WATER OPERATION

When operating your boat in shallow water, you can tilt the outboard beyond the maximum trim range to prevent hitting bottom.

1. Reduce the engine speed below 2000 RPM.
2. Tilt the outboard up. Make sure all the water intake holes stay submerged at all times.
3. Operate the engine at slow speed only. If engine speed exceeds 2000 RPM, the outboard will automatically return down to the maximum trim range.

Propeller Steering Torque—Trim Tab Adjustment

Propeller steering torque may cause your boat to pull in one direction. Steering torque normally occurs at or above planing speeds. Higher speed causes higher steering torque loads. The trim tab can compensate for normal steering torque in many cases and can be adjusted within limits to reduce any unequal steering effort.

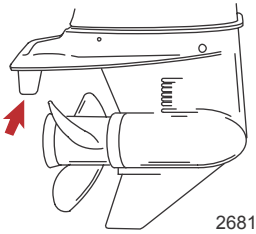

26816

NOTE: *Trim tab adjustment will have little effect reducing steering torque if the outboard is installed with the antiventilation plate approximately 50 mm (2 in.) or more above the boat bottom.*

TRIM TAB ADJUSTMENT

Operate your boat at normal cruising speed and trim position. Turn the boat left and right and note the direction the boat turns more easily.

If adjustment is necessary, loosen the trim tab fastener and make small adjustments at a time. If the boat turns more easily to the left, move the trailing edge of the trim tab to the left. If the boat turns more easily to the right, move the trailing edge of the trim tab to the right. Tighten the fastener and test.

OPERATION

Important Information

IMPORTANT DAILY INSPECTION BEFORE EACH USE

Any outboard mounted on the boat must have the mounting hardware inspected and checked to ensure that the hardware has not become loose. A decal on the transom bracket reminds the owner to check the fasteners securing the outboard to the transom before each use.

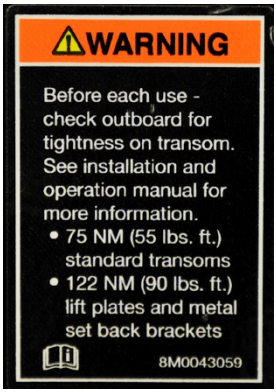

51985

Decal on the transom bracket

PRESTARTING CHECK LIST

- Operator knows safe navigation, boating, and operating procedures.
- An approved personal flotation device of suitable size for each person aboard and readily accessible (it is the law).
- A ring type life buoy or buoyant cushion designed to be thrown to a person in the water.
- Know your boats' maximum load capacity. Look at the boat capacity plate.
- Fuel supply OK.
- Arrange passengers and load in the boat so the weight is distributed evenly and everyone is seated in a proper seat.
- Tell someone where you are going and when you expect to return.
- It is illegal to operate a boat while under the influence of alcohol or drugs.
- Know the waters and area you will be boating; tides, currents, sand bars, rocks, and other hazards.
- Make inspection checks listed in **Maintenance - Inspection and Maintenance Schedule.**

Operating in Freezing Temperatures

When using your outboard or having your outboard moored in freezing or near freezing temperatures, keep the outboard tilted down at all times so the gearcase is submerged. This prevents the trapped water in the gearcase from freezing and causing possible damage to the water pump and other components.

If there is a chance of ice forming on the water, the outboard should be removed and drained completely of water. If ice should form at the water level inside the outboard driveshaft housing, it will block water flow to the engine causing possible damage.

Operating in Saltwater or Polluted Water

We recommend that you flush the internal water passages of your outboard with fresh water after each use in salt or polluted water. This will prevent a buildup of deposits from clogging the water passages. Refer to **Maintenance - Flushing the Cooling System**.

If you keep your boat moored in the water, always tilt the outboard so the gearcase is completely out of water (except in freezing temperatures) when not in use.

Wash the outboard exterior and flush out the exhaust outlet of the propeller and gearcase with fresh water after each use. Each month, spray Mercury Precision or Quicksilver Corrosion Guard on external metal surfaces. Do not spray on corrosion control anodes as this will reduce the effectiveness of the anodes.

Operating at High Elevations

Your engine automatically compensates for high elevation changes. A different pitch propeller may help reduce some normal performance loss resulting from reduced oxygen in the air. Consult your dealer.

Effects of Elevation and Weather on Performance

The following conditions lower engine performance and cannot be compensated by the engine fuel or electronic management systems:

- Above sea level elevations
- High temperature
- Low barometric pressure
- High humidity

These conditions above reduce air density to the engine, which in turn lowers the following:

- Boost pressure on supercharged engines
- Horsepower and torque throughout the RPM range
- Peak RPM
- Cranking compression

EXAMPLE: An engine running at an elevation of 8,000 feet will have over a 30% power loss while a loss of engine power on a hot and humid day could be as much as 14%. These losses apply to normally aspirated and supercharged engines.

Compensating for power robbing conditions:

- Switch to a lower pitch propeller.
- Change the gear ratio if it is available.

Some boat performance can be improved by dropping to a lower pitch propeller, but engine performance will still remain lower. In some cases, a gear ratio reduction may be more beneficial. To optimize engine performance, prop the engine to allow it to operate at or near the top end of the recommended maximum RPM range at wide-open throttle with a normal boat load.

Other advantages to propeller or gear ratio changes:

- Reduces the possibility of detonation
- Enhances overall reliability and durability of the engine

Setting Trim Angle while Running Engine at Idle Speed

The exhaust relief hole on the outboard can become submerged on some boats if the engine is trimmed full in while running at idle speed. This may result in exhaust restriction, rough idle, excessive smoke, and fouled spark plugs. If this condition exists, trim outboard up until exhaust relief hole is out of the water.

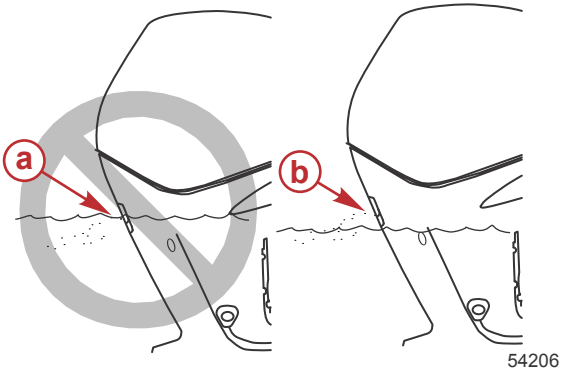

a - Relief hole submerged (wrong)
b - Relief hole above waterline (correct)

Operating in Shallow Water

When operating your boat in shallow water, you can tilt the outboard beyond the maximum trim range to minimize possible contact with the bottom.

NOTICE

Operating the engine with the outboard in the tilt range can damage the engine or the transom. If operating the engine in the tilt range, such as in shallow water, do not exceed 2000 RPM.

1. Reduce the engine speed below 2000 RPM.
2. Tilt the outboard up. Verify all of the cooling water intake holes are always submerged while the engine is running.
3. Operate the engine at slow speed only.

IMPORTANT: When operating the outboard above the trim range, the outboard will automatically return down to the maximum trim range if the applied thrust force exceeds the preset pressure limit of the tilt circuit. The tilt circuit preset pressure limit can be exceeded at approximate engine speeds of 1500–2000 RPM. The following variables have a direct affect at which engine speed the pressure limit will be exceeded:

- **The outboard shaft length**
- **Gearcase type**
- **Weight of the load in the boat**
- **Propeller pitch**

Engine Break-in Procedure

IMPORTANT: Failure to follow the engine break-in procedures can result in poor performance throughout the life of the engine and can cause engine damage. Always follow break-in procedures.

1. For the first two hours of operation, run the engine at varied throttle settings up to 4500 RPM or at three-quarter throttle, and at full throttle for approximately one minute every ten minutes.
2. For the next eight hours of operation, avoid continuous operation at full throttle for more than five minutes at a time.

Starting the Engine

Before starting, read the **Prestarting Check List**, and **Engine Break-in Procedure** in this section.

NOTICE

Without sufficient cooling water, the engine, the water pump, and other components will overheat and suffer damage. Provide a sufficient supply of water to the water inlets during operation.

OPERATION

1. Check the engine oil level.

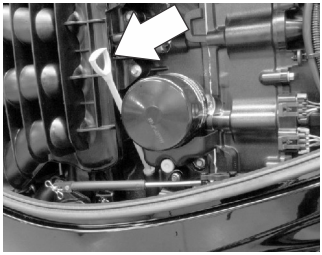

47820

2. Ensure the cooling water intake is submerged.

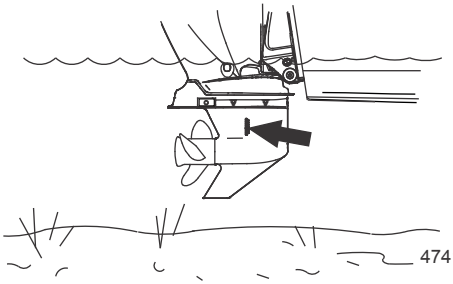

47412

3. Open the fuel tank vent screw (in filler cap) on manual venting type fuel tanks.

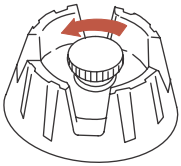

19748

4. Set the lanyard stop switch to the RUN position. Refer to **General Information - Lanyard Stop Switch**.

19791

5. Shift outboard to neutral (N) position.

6. Ignition key starting - Turn ignition key to the START position and release the key. The electronic starting system will automatically crank the engine for starting. If the engine fails to start, the engine will stop cranking. Turn the key to the START position again until engine starts.

NOTE: *For initial start of a new engine or for an engine that ran out of fuel or was drained of fuel, the fuel system should be filled as follows:*

Turn the ignition key switch to the ON position for approximately five seconds. Turn the key to the START position and release it, the engine will crank for a maximum of eight seconds. The engine may start, run rough, and stall while filling the system. Repeat this starting procedure until the engine remains running. Allow the starter motor to cool for 20–30 seconds between start attempts.

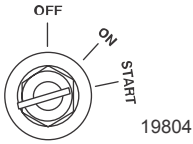

7. After the engine starts, check for a steady stream of water flowing out of the water pump indicator hole.

IMPORTANT: If no water is coming out of the water pump indicator hole, stop the engine and check the cooling water intake for obstruction. No obstruction may indicate a water pump failure or blockage in the cooling system. These conditions will cause the engine to overheat. Have the outboard checked by your dealer. Operating the engine while overheated will cause engine damage.

8. If the engine does not start, push the throttle only button in and advance the remote control handle slightly to open the throttle. Crank the engine and be prepared to immediately reduce the throttle after the engine has started.

WARMING UP ENGINE

Before beginning operation, allow the engine to warm up at idling speed for three minutes.

Gear Shifting

IMPORTANT: Observe the following:

- **Never shift the outboard into or out of gear unless the engine speed is at idle. Shifting at higher than engine idle speed could cause damage to the gearcase.**
- **Do not shift the outboard into reverse when the forward motion of the boat is greater than a no wake speed. Shifting into reverse at higher boat speeds could cause the engine to stall, and in some situations, this could cause water to be drawn into the cylinders, resulting in severe engine damage.**
- **Do not shift the outboard into reverse when the engine is not running. Damage to the shift linkage could occur.**
- The outboard has three gear shift positions: forward (F), neutral (N), and reverse (R).
- When shifting, always stop at the neutral position and allow the engine idle speed to stabilize before shifting into another gear.
- Always shift the outboard into gear with a quick motion.

- After shifting the outboard into gear, advance the lever further to increase speed.

Stopping the Engine

Reduce the engine speed and shift the outboard to neutral position. Turn the ignition key to "OFF" position.

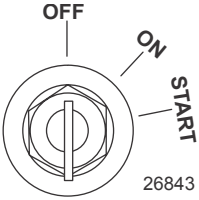

MAINTENANCE

Cleaning Care Recommendations

OUTBOARD CARE

To keep your outboard in the best operating condition, it is important that your outboard receive the periodic inspections and maintenance listed in the **Inspection and Maintenance Schedule**. We urge you to keep it maintained properly to ensure the safety of you and your passengers, and retain its dependability.

Record maintenance performed in the **Maintenance Log** at the back of this book. Save all maintenance work orders and receipts.

Selecting Replacement Parts For Your Outboard

We recommend using original Mercury Precision or Quicksilver replacement parts and Genuine Lubricants.

DO NOT USE CAUSTIC CLEANING CHEMICALS

IMPORTANT: Do not use caustic cleaning chemicals on the outboard power package. Some cleaning products contain strong caustic agents such as hull cleaners with hydrochloric acid. These cleaners can degrade some of the components they come in contact with including critical steering fasteners.

Damage to steering fasteners may not be obvious during visual inspection and this damage may lead to catastrophic failure. Some caustic cleaning chemicals may cause or accelerate corrosion. Exercise caution when using cleaning chemicals around the engine and follow the recommendations on the packaging of the cleaning product.

CLEANING GAUGES

IMPORTANT: Never use high-pressure water to clean gauges.

Routine cleaning of the gauges is recommended to prevent a buildup of salt and other environmental debris. Crystalized salt can scratch the gauge display lens when using a dry or damp cloth. Ensure that the cloth has a sufficient amount of fresh water to dissolve and remove salt or mineral deposits. Do not apply aggressive pressure on the display lens while cleaning.

When water marks cannot be removed with a damp cloth, mix a 50/50 solution of warm water and isopropyl alcohol to clean the display lens. **Do not use** acetone, mineral spirits, turpentine type solvents, or ammonia based cleaning products. The use of strong solvents or detergents may damage the coating, the plastics, or the rubber keys on the gauges. If the gauge has a sun cover available, it is recommended that the cover be installed when the unit is not in use to prevent UV damage to the plastic bezels and rubber keys.

CLEANING REMOTE CONTROLS

IMPORTANT: Never use high-pressure water to clean remote controls.

MAINTENANCE

Routine cleaning of the remote control external surfaces is recommended to prevent a buildup of salt and other environmental debris. Use a cloth towel which has a sufficient amount of fresh water to dissolve and remove salt or mineral deposits.

When water marks cannot be removed with a damp cloth, mix a 50/50 solution of warm water and isopropyl alcohol to clean the remote control. **Do not use** acetone, mineral spirits, turpentine type solvents, or ammonia based cleaning products. The use of strong solvents or detergents may damage the coating, the plastics, or the rubber components on the remote control.

CLEANING CARE FOR TOP AND BOTTOM COWLS

IMPORTANT: Dry wiping (wiping the plastic surface when it is dry) will result in minor surface scratches. Always wet the surface before cleaning. Do not use detergents containing hydrochloric acid. Follow the cleaning and waxing procedure.

Cleaning and Waxing Procedure

1. Before washing, rinse the cowls with clean water to remove dirt and dust that may scratch the surface.
2. Wash the cowls with clean water and a mild nonabrasive soap. Use a soft clean cloth when washing.
3. Dry thoroughly with a soft clean cloth.
4. Wax the surface using a nonabrasive automotive polish (polish designed for clear coat finishes). Remove the applied wax by hand using a clean soft cloth.
5. To remove minor scratches, use Mercury Marine Cowl Finishing Compound (92-859026K 1).

CLEANING CARE FOR THE POWERHEAD (SALTWATER USE)

If the outboard is operated in saltwater, remove the top cowl and flywheel cover. Inspect the powerhead and powerhead components for salt buildup. Wash off any salt buildup from the powerhead and powerhead components with fresh water. Keep water spray out of the air filter/intake and alternator. After washing, allow the powerhead and components to dry. Apply Quicksilver or Mercury Precision Lubricants Corrosion Guard spray on the external metal surfaces of the powerhead and powerhead components. Do not allow the Corrosion Guard spray to come in contact with the alternator drive belt or belt pulleys.

IMPORTANT: Do not allow lubricant or Corrosion Guard spray to come in contact with the alternator drive belt or the belt pulleys. The alternator drive belt could slip and be damaged if it becomes coated with any lubricant or Corrosion Guard spray.

Tube Ref No.	Description	Where Used	Part No.
120	Corrosion Guard	External metal surfaces of the powerhead and powerhead components.	92-802878 55

EPA Emissions Regulations

All new outboards manufactured by Mercury Marine are certified to the United States Environmental Protection Agency, as conforming to the requirements of the regulations for the control of air pollution from new outboard motors. This certification is contingent on certain adjustments set to factory standards. For this reason, the factory procedure for servicing the product must be strictly followed and, wherever practicable, returned to the original intent of the design. **Maintenance, replacement, or repair of the emission control devices and systems may be performed by any marine spark ignition (SI) engine repair establishment or individual.**

EMISSION CERTIFICATION LABEL

An emission certification label, showing emission levels and engine specifications directly related to emissions, is placed on the engine at the time of manufacture.

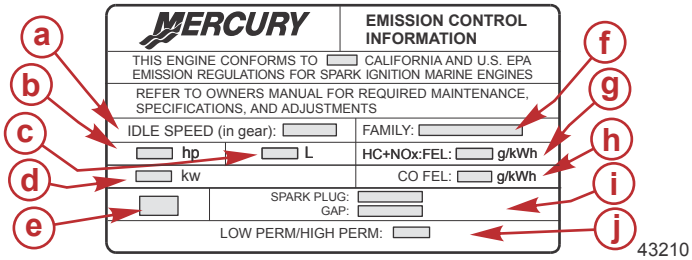

- **a -** Idle speed
- **b -** Engine horsepower
- **c -** Piston displacement
- **d -** Engine power - kilowatts
- **e -** Date of manufacture
- **f -** US EPA engine family name
- **g -** Regulated emission limit for the engine family
- **h -** Regulated emission limit for the engine family
- **i -** Recommended spark plug and gap
- **j -** Percent of fuel line permeation

OWNER RESPONSIBILITY

The owner/operator is required to have routine engine maintenance performed to maintain emission levels within prescribed certification standards.

MAINTENANCE

The owner/operator is not to modify the engine in any manner that would alter the horsepower or allow emission levels to exceed their predetermined factory specifications.

Inspection and Maintenance Schedule

BEFORE EACH USE

- Check engine oil level. Refer to **Fuel and Oil - Checking and Adding Engine Oil**.
- Check that lanyard stop switch stops the engine.
- Inspect the outboard for tightness to the boat transom. If any looseness of the outboard or mounting fasteners exist, tighten the outboard mounting fasteners to the specified torque. When looking for signs of looseness, look for loss of outboard transom bracket material or paint caused by movement between the outboard mounting fasteners and the outboard transom brackets. Also look for signs of movement between the outboard transom brackets and the boat transom (lift plate/setback bracket).

Description	Nm	lb-in.	lb-ft
Outboard mounting locknuts and bolts - standard boat transom	75	–	55.3
Outboard mounting locknuts and bolts - metal lift plates and setback brackets	122	–	90

- Visually inspect the fuel system for deterioration or leaks.
- Check steering system for binding or loose components.
- Check propeller blades for damage.
- Inspect the hydraulic steering fittings and hoses for leaks or damage, if equipped.
- Inspect the hydraulic steering fluid level, if equipped.

AFTER EACH USE

- Flush out the outboard cooling system if operating in salt or polluted water. Refer to **Flushing the Cooling System**.
- Wash off all salt deposits and flush out the exhaust outlet of the propeller and gearcase with fresh water if operating in saltwater.
- If operating in saltwater, inspect the powerhead and powerhead components for salt buildup. Refer to **Cleaning Care for the Powerhead (Saltwater Use)**.

EVERY 100 HOURS OF USE OR ONCE YEARLY, WHICHEVER OCCURS FIRST

- Change engine oil and replace the oil filter. The oil should be changed more often when the engine is operated under adverse conditions, such as extended trolling. Refer to **Changing Engine Oil**.

- Check low-pressure fuel filter for contaminants. Replace filter if required. Refer to **Fuel System**.
- Remove the propeller and lubricate the propeller shaft. Refer to **Propeller Replacement**.
- Inspect the condition of propeller bore sleeve when the propeller is removed. Replace the propeller bore sleeve if it is suspected of being worn, loose, or the retention tabs are broken—dealer service. Refer to **Propeller Bore Sleeve Inspection—If Equipped.**
- Inspect the thermostat visually for corrosion or a broken spring. Verify the thermostat closes completely at room temperature—dealer service.
- Check the outboard mounting fasteners that secure the outboard to the boat transom. Tighten the fasteners to the specified torque—dealer service.

Description	Nm	lb-in.	lb-ft
Outboard mounting locknuts and bolts - standard boat transom	75	–	55.3
Outboard mounting locknuts and bolts - metal lift plates and setback brackets	122	–	90

- Check corrosion control anodes. Check more frequently when used in saltwater. Refer to **Corrosion Control Anode**.
- Drain and replace gearcase lubricant. Refer to **Gearcase Lubrication**.
- Inspect battery. Refer to **Battery Inspection**.
- Saltwater usage: Remove and inspect spark plugs for corrosion and replace as necessary. Apply Anti-Seize Compound only on threads of spark plug prior to installation. Refer to **Spark Plug Inspection and Replacement**.

Tube Ref No.	Description	Where Used	Part No.
81	Anti-Seize Compound	Spark plug threads	92-898101389

- Check tightness of bolts, nuts, and other fasteners—dealer service.
- Add Quickleen to the fuel tank.

Tube Ref No.	Description	Where Used	Part No.
	Quickleen Engine & Fuel System Cleaner	Fuel tank	8M0047931

- Check cowl seals to ensure seals are intact and not damaged.
- Check internal cowl sound reduction foam to ensure foam is intact and not damaged, if equipped.

- Check that the intake silencer is in place, if equipped.
- Check that the idle relief muffler is in place, if equipped.
- Check for loose hose clamps and rubber boots on the air intake assembly, if equipped.

EVERY 300 HOURS OF USE OR THREE YEARS

- Check power trim fluid. Refer to **Checking Power Trim Fluid**.
- Lubricate all lubrication points. Lubricate more frequently when used in saltwater. Refer to **Lubrication Points**.
- Replace water pump impeller—dealer service.[1]
- Lubricate the splines on the upper driveshaft—dealer service.
- Check wiring and connectors—dealer service.
- Replace the spark plugs.

BEFORE PERIODS OF STORAGE

- Refer to **Storage** section.

Maintenance Schedule Decal (75–115)

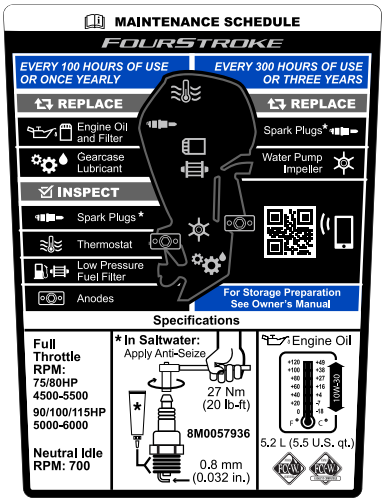

58248

75–115

1. Replace the water pump impeller more often if overheating occurs or reduced water pressure is noted.

MAINTENANCE

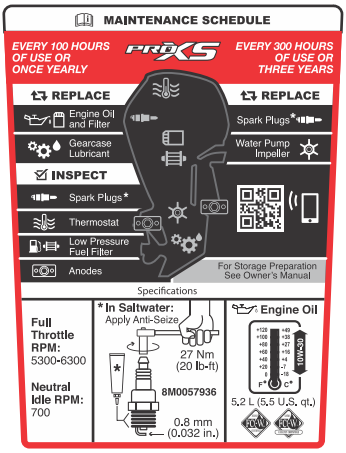

59342

115 Pro XS

The following table shows the icons and a general description of the maintenance schedule decal that is located on the engine.

Icon	Definition	Icon	Definition
58249	Replace	58250	Inspect
58251	Engine oil and filter	58252	Gearcase lubricant
58253	Spark plugs	58254	Thermostat
58255	Low pressure fuel filter	58256	Anodes
58258	Water pump impeller		

Flushing the Cooling System

Flush the internal water passages of the outboard with fresh water after each use in salt, polluted, or muddy water. This will help prevent a buildup of deposits from clogging the internal water passages.

NOTE: *The outboard can be tilted or in the vertical operating position during flushing.*

1. With the engine turned off, place the outboard in either the operating position (vertical) or in a tilted position.
2. Remove the flush connector from the bottom cowl.
3. Remove the cover from the flush connector and thread a water hose into the flush connector.

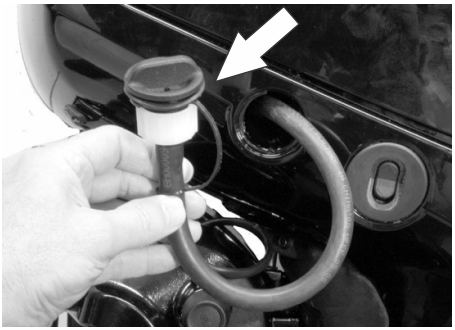

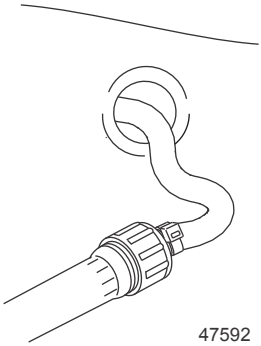

4. Turn on the water tap (½ maximum) and let the water flush through the cooling system for about 15 minutes.
5. When flushing is complete, turn off the water and disconnect the water hose.
6. Install the cover on the flush connector. Place the flush connector back into the bottom cowl.

Top Cowl Removal and Installation

REMOVAL

Unlock the top cowl by pulling out on the rear cowl latch. Lift the top cowl off the engine.

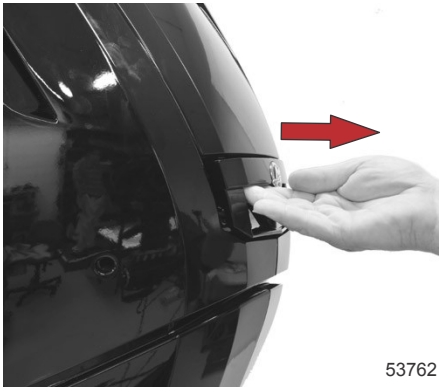

INSTALLATION

1. Lower the top cowl over the engine.
2. Bring the front of the cowl down first and engage the front cowl hook. Lower the cowl into the seated position and apply pressure to the back of the cowl to lock it in place. Ensure the cowl is securely fastened by trying to pull up on the back of the cowl.

Flywheel Cover Removal and Installation

REMOVAL

Lift the cover off the four mounting pins.

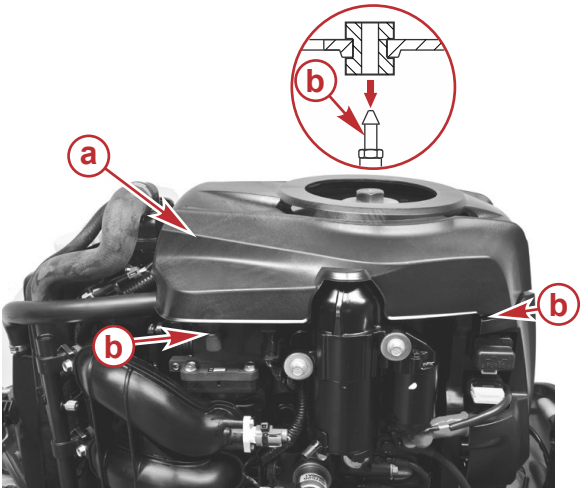

53765

a - Flywheel cover
b - Four mounting pins, two on each side of the engine

INSTALLATION

Position the cover onto the four mounting pins and secure the cover in place by pushing the cover down onto the mounting pins.

Battery Inspection

The battery should be inspected at periodic intervals to ensure proper engine starting capability.

IMPORTANT: Read the safety and maintenance instructions which accompany your battery.

1. Turn off the engine before servicing the battery.
2. Ensure the battery is secure against movement.
3. Battery cable terminals should be clean, tight, and correctly installed. Positive to positive and negative to negative.
4. Ensure the battery is equipped with a nonconductive shield to prevent accidental shorting of battery terminals.

Fuel System

⚠ WARNING

Fuel is flammable and explosive. Ensure that the key switch is off and the lanyard is positioned so that the engine cannot start. Do not smoke or allow sources of spark or open flame in the area while servicing. Keep the work area well ventilated and avoid prolonged exposure to vapors. Always check for leaks before attempting to start the engine, and wipe up any spilled fuel immediately.

IMPORTANT: Use an approved container to collect and store fuel. Wipe up spilled fuel immediately. Material used to contain spilled fuel must be disposed of in an approved receptacle.

Before servicing any part of the fuel system:

1. Stop engine and disconnect the battery.
2. Perform fuel system service in a well-ventilated area.
3. Inspect any completed service work for sign of fuel leakage.

FUEL LINE INSPECTION

Visually inspect the fuel line for cracks, swelling, leaks, hardness, or other signs of deterioration or damage. If any of these conditions are found, the fuel line must be replaced.

FUEL FILTERS

Refer to the **Inspection and Maintenance Schedule** for the proper maintenance interval.

The engine is equipped with two fuel filters, a low-pressure filter and a high-pressure filter. The low-pressure filter can be serviced as a general maintenance item, however, the high-pressure filter should only be serviced by an authorized dealer.

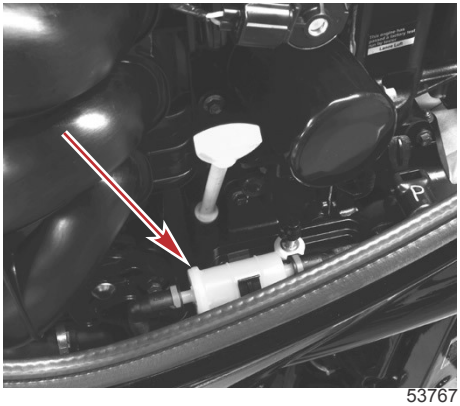

Low pressure fuel filter

LOW-PRESSURE FUEL FILTER

Removal

1. Turn ignition key switch to "OFF" position.
2. Place a rag or towel under the fuel filter to capture fuel that will leak from the hoses and filter.

⚠ WARNING

Fuel is flammable and explosive. Ensure that the key switch is off and the lanyard is positioned so that the engine cannot start. Do not smoke or allow sources of spark or open flame in the area while servicing. Keep the work area well ventilated and avoid prolonged exposure to vapors. Always check for leaks before attempting to start the engine, and wipe up any spilled fuel immediately.

3. Push in on the fuel hose release tabs and disconnect the fuel hoses from the fuel filter.

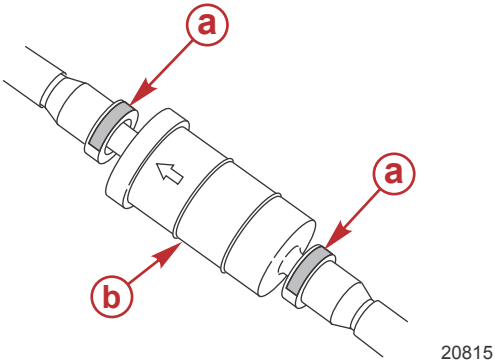

a - Fuel hose release tab
b - Low-pressure fuel filter

Installation

1. Install the new fuel filter so the arrow points toward the engine.
2. Connect the fuel hoses to the fuel filter securely with the locking hose connections.
3. Visually inspect for fuel leakage from the fuel filter while turning the ignition key to "RUN" position, forcing fuel into the fuel filter. Repair any fuel leaks found.

Corrosion Control Anode

The outboard has corrosion control anodes at different locations. An anode helps protect the outboard against galvanic corrosion by sacrificing its metal to be slowly eroded instead of the outboard metals.

Each anode requires periodic inspection, especially in saltwater which will accelerate the erosion. To maintain this corrosion protection, always replace the anode before it is completely eroded. Never paint or apply a protective coating on the anode as this will reduce effectiveness of the anode.

Two anodes are located on each side of the gearcase. Another anode is installed on the bottom of the transom bracket assembly.

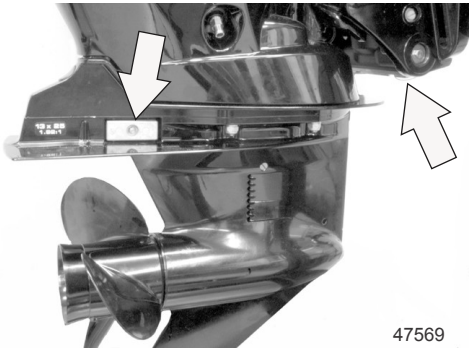

Propeller Bore Sleeve Inspection—If Equipped

The propeller bore sleeve is an important integral component of the gear housing and should be inspected when the propeller is removed. The propeller bore sleeve is designed to enhance engine characteristics and boat performance by minimizing engine exhaust escaping between the outside of the propeller and the gear housing. Exhaust gas mixing with the water over the propeller blades, will cause a loss of engine and boat performance.

IMPORTANT: An authorized dealer should replace the propeller bore sleeve if it is suspected of being worn, loose, or the retention tabs are broken.

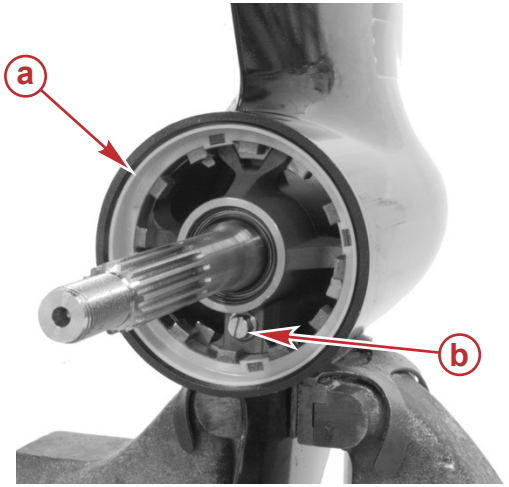

a - Propeller bore sleeve
b - Gearcase oil fill screw

Propeller Replacement

⚠ WARNING

Rotating propellers can cause serious injury or death. Never operate the boat out of the water with a propeller installed. Before installing or removing a propeller, place the drive unit in neutral and engage the lanyard stop switch to prevent the engine from starting. Place a block of wood between the propeller blade and the anti-ventilation plate.

1. Shift outboard to the neutral (N) position.

2. Straighten the bent tabs on the propeller nut retainer.
3. Place a block of wood between the gearcase and the propeller to hold the propeller and remove the propeller nut.

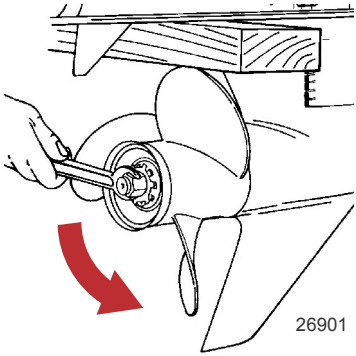

4. Pull the propeller straight off the shaft. If the propeller is seized to the shaft and cannot be removed, have the propeller removed by an authorized dealer.

5. Coat the propeller shaft with Extreme Grease or 2-4-C with PTFE.

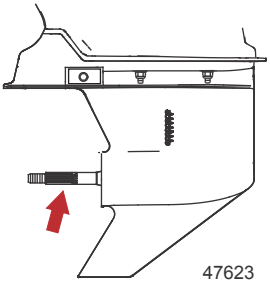

Tube Ref No.	Description	Where Used	Part No.
	Extreme Grease	Propeller shaft	8M0071842
95	2-4-C with PTFE	Propeller shaft	92-802859A 1

IMPORTANT: To prevent the propeller hub from corroding and seizing to the propeller shaft, especially in saltwater, always apply a coat of the recommended lubricant to the entire propeller shaft at the recommended maintenance intervals and also each time the propeller is removed.

FLO-TORQ II PROPELLERS

1. Install the propeller onto the shaft with the supplied components as shown.
2. Place the locknut retainer over the raised pins on the drive sleeve adapter and tighten the locknut to the specified torque.

3. Secure the locknut by bending the tabs up against the locknuts.

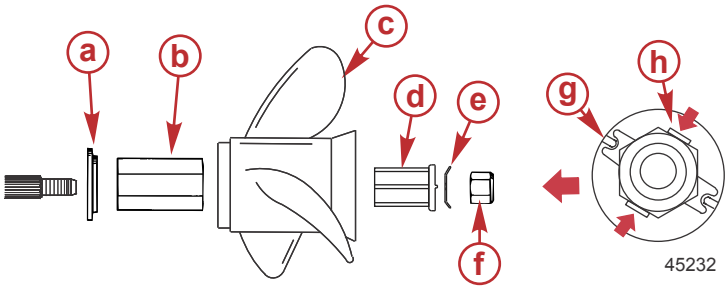

a - Forward thrust washer
b - Drive sleeve
c - Propeller
d - Drive sleeve adapter
e - Locknut retainer
f - Locknut
g - Raised pins
h - Tabs bent against the locknut

Description	Nm	lb-in.	lb-ft
Propeller nut	75	–	55.3

FLO-TORQ IV PROPELLERS

1. Install the propeller onto the shaft with the supplied components as shown.
2. Tighten the locknut to the specified torque.

3. Secure the locknut by bending three of the tabs into the grooves in the drive sleeve adapter.

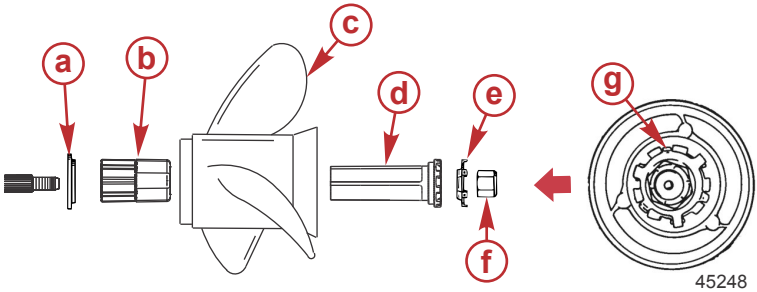

a - Forward thrust washer
b - Drive sleeve
c - Propeller
d - Drive sleeve adapter
e - Locknut retainer
f - Locknut
g - Tabs bent into grooves

Description	Nm	lb-in.	lb-ft
Propeller nut	75	–	55.3

Spark Plug Inspection and Replacement

1. Remove the spark plug leads. Pull the rubber boots off the spark plugs.

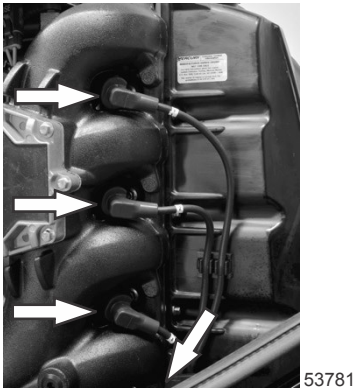

2. Remove the spark plugs to inspect.

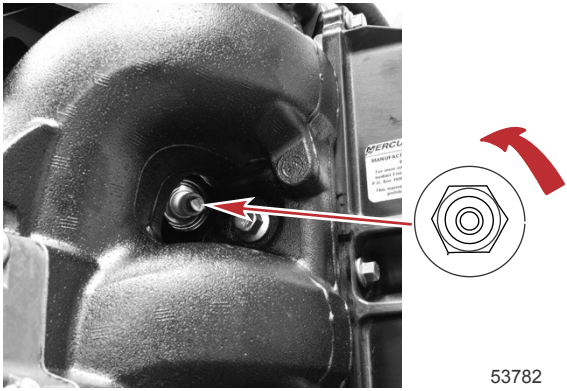

3. Replace the spark plug if the electrode is worn; the insulator is rough, cracked, broken, or blistered; or if the precious metal is not visible on the spark plug electrode.

IMPORTANT: The color of the plug may not accurately reflect its condition. To accurately diagnose a faulty plug, inspect the precious metal on the plug's electrode. If no precious metal is visible, replace the plug.

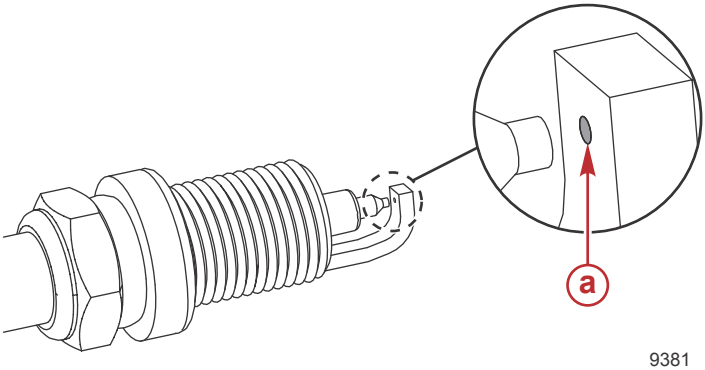

a - Precious metal

4. Set the spark plug gap. Refer to **General Information - Specifications**.

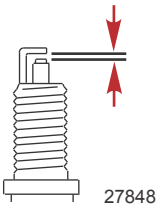

a. All of the spark plugs should have the gap checked and corrected as necessary before installation.
b. Measure the gap with a feeler gauge or pin gauge. Never use a wedge-type gap checking tool to inspect or to adjust the gap.
c. If an adjustment is necessary, do not pry or apply any force on the center electrode. This is critical with any type of spark plug that has a wear surface, such as platinum or iridium added to either the ground electrode or the center electrode.
d. When it is necessary to widen the gap, use a tool that only pulls back on the ground electrode without touching the center electrode, the porcelain, or the wear portion of the ground electrode.
e. When it is necessary to close the gap, gently tap the plug ground electrode on a hard surface.

5. Saltwater use - Apply a thin coating of Anti-Seize Compound only on threads of spark plugs.

Tube Ref No.	Description	Where Used	Part No.
81	Anti-Seize Compound	Spark plug threads	92-898101389

6. Before installing spark plugs, clean off any dirt on the spark plug seats. Install the plugs finger-tight and then tighten an additional 1/4 turn or tighten to the specified torque.

Description	Nm	lb-in.	lb-ft
Spark plug	27	–	20

Fuse Replacement

IMPORTANT: Always carry spare fuses.

The electrical wiring circuits on the outboard are protected from overload by fuses in the wiring. If a fuse is blown, try to locate and correct the cause of the overload. If the cause is not found, the fuse may blow again.

Open the fuse holder and look at the silver colored band inside the fuse. If the band is broken, replace the fuse. Replace fuse with a new fuse with the same rating.

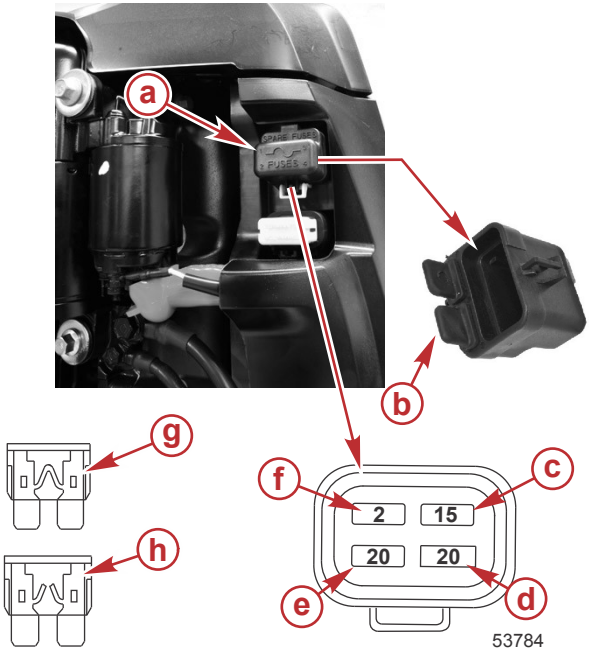

- **a -** Cover
- **b -** Spare fuse holders
- **c -** Fuse 3 - HELM 15 amp - 14 pin remote control harness/cowl trim switch
- **d -** Fuse 4 - IGN. 20 amp - ignition system
- **e -** Fuse 2 - FUEL 20 amp - fuel delivery
- **f -** Fuse 1 - DIAG. 2 amp - diagnostics/vessel (accessory) harness
- **g -** Good fuse
- **h -** Blown fuse

Lubrication Points

1. Lubricate the following with Extreme Grease or 2-4-C with PTFE.

Tube Ref No.	Description	Where Used	Part No.
	Extreme Grease	Propeller shaft	8M0071842

Tube Ref No.	Description	Where Used	Part No.
95	2-4-C with PTFE	Propeller shaft	92-802859A 1

- Propeller shaft - Refer to **Propeller Replacement** for removal and installation of the propeller. Coat the entire propeller shaft with lubricant to prevent the propeller hub from corroding and seizing to the shaft.

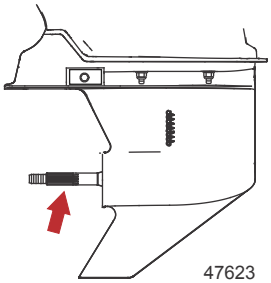

2. Lubricate the following with 2-4-C with PTFE or Extreme Grease.

Tube Ref No.	Description	Where Used	Part No.
95	2-4-C with PTFE	Steering cable	92-802859A 1
	Extreme Grease	Steering cable	8M0071842

- Steering cable grease fitting (if equipped) - Rotate steering wheel to fully retract the steering cable end into the outboard tilt tube. Lubricate through fitting.

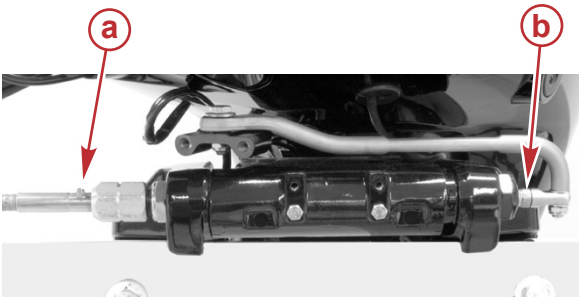

47651

a - Fitting
b - Steering cable end

⚠ WARNING

Incorrect cable lubrication can cause hydraulic lock, leading to serious injury or death from loss of boat control. Completely retract the end of the steering cable before applying lubricant.

- Tilt lever grease fitting and the swivel pin grease fitting.

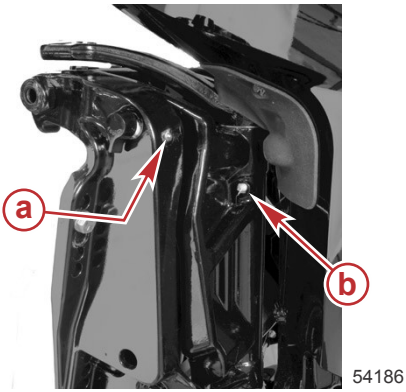

54186

a - Tilt lever grease fitting
b - Swivel pin grease fitting

3. Lubricate the following with lightweight oil.
   - Steering link rod pivot points - Lubricate pivot points.

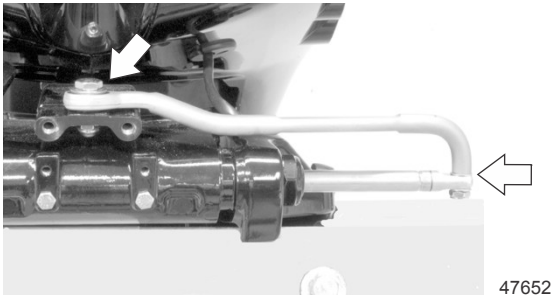

47652

Checking Power Trim Fluid

1. Tilt the outboard to the full up position and engage the tilt support lever.

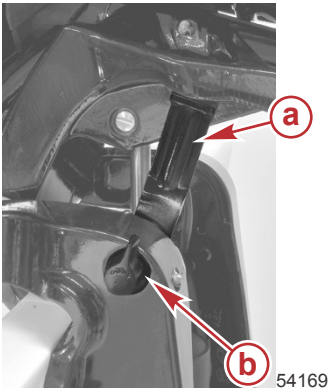

a - Tilt support lever
b - Knob

2. Remove the fill cap and check fluid level. The fluid level should be even with the bottom of the fill hole. Add Quicksilver or Mercury Precision Lubricants Power Trim and Steering Fluid. If not available, use automotive automatic transmission fluid (ATF).

Tube Ref No.	Description	Where Used	Part No.
114	Power Trim and Steering Fluid	Power trim reservoir	92-858074K01

Changing Engine Oil

ENGINE OIL CAPACITY

Engine oil capacity is approximately 5.2 liter (5.5 US qt).

OIL CHANGING PROCEDURE

1. Tilt the outboard out/up past vertical for approximately one minute to allow any trapped oil to drain back to the oil sump.

2. Tilt the outboard to a vertical position.
3. Use a 16 mm (5/8 in.) wrench and loosen the oil drain valve so that it can be turned by hand. Be careful not to open the valve too far allowing oil to drain.
4. Attach a 12 mm (7/16 in.) I.D. drain hose to the oil drain valve. Position the opposite end of the hose into an appropriate container.
5. Loosen the oil drain valve 2-1/2 turns to allow oil to drain. Do not exceed 2-1/2 turns.

IMPORTANT: Do not loosen the oil drain valve more than 2-1/2 turns out. The oil seal could get damaged beyond 2-1/2 turns.

6. After the oil has drained, hand-tighten the oil drain valve (clockwise) and remove the oil drain hose.
7. Tighten the oil drain valve to the specified torque. Clean up any oil in the valve area.

Description	Nm	lb-in.	lb-ft
Oil drain valve	15	133	–

IMPORTANT: Overtightening the oil drain valve can damage the oil sump.

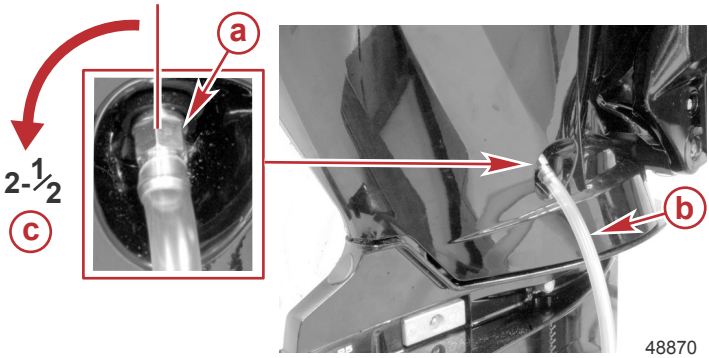

a - Oil drain valve
b - Drain hose
c - Loosen 2-1/2 turns maximum

CHANGING OIL FILTER

1. Remove the plug from the oil trough and attach a 12 mm (7/16 in.) I.D. drain hose to the fitting. Position the opposite end of the hose into an appropriate container.
2. Unscrew the old filter by turning the filter to the left.
3. Allow oil in the trough to drain and remove the oil drain hose.
4. Clean any oil from the oil trough and install the plug.

5. Clean the oil filter mounting base. Apply a film of clean oil to the filter gasket. Do not use grease. Screw new filter on until gasket contacts base, then tighten 3/4 to 1 turn.

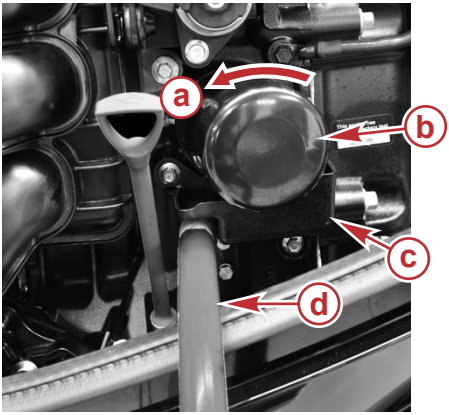

53792

a - Loosen
b - Oil filter
c - Oil trough
d - Drain hose

OIL FILLING

1. Remove the oil fill cap and add approximately 5.2 liter (5.5 US qt) of the recommended oil. This will bring the oil level within the midpoint of the operating range.
2. Idle engine for five minutes and check for leaks. Stop the engine. For an accurate oil level reading, allow the engine to cool for at least an hour before checking the oil level. Refer to **Fuel and Oil - Checking and Adding Engine Oil**.

NOTE: *Checking the oil level within five minutes of engine shutdown can falsely read up to 1 liter (1 US qt) low. Allow the engine to cool for at least an hour before checking the oil level.*

53755

Gearcase Lubrication

When adding or changing gearcase lubricant, visually check for the presence of water in the lubricant. If water is present, it may have settled to the bottom and will drain out prior to the lubricant, or it may be mixed with the lubricant, giving it a milky colored appearance. If water is noticed, have the gearcase checked by your dealer. Water in the lubricant may result in premature bearing failure or, in freezing temperatures, will turn to ice and damage the gearcase.

Examine the drained gearcase lubricant for metal particles. A small amount of metal particles indicates normal gear wear. An excessive amount of metal filings or larger particles (chips) may indicate abnormal gear wear and should be checked by an authorized dealer.

DRAINING GEARCASE

1. Place the outboard in a vertical operating position.
2. Remove the propeller. Refer to **Propeller Replacement**.
3. Place the drain pan below the outboard.
4. Remove the vent plug and fill/drain plug and drain lubricant.

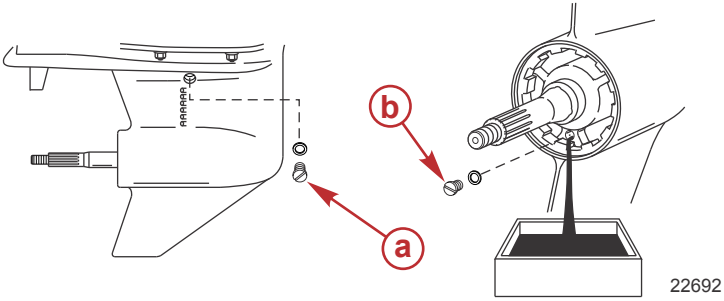

a - Vent plug
b - Fill/drain plug

GEARCASE LUBRICANT CAPACITY

Gearcase Lubricant Capacity (approximate)		
Standard		800 ml (27.1 fl oz)
Command Thrust	Right-hand rotation	810 ml (27.4 fl oz)
	Left-hand rotation	790 ml (26.7 fl oz)

GEARCASE LUBRICANT RECOMMENDATION

Mercury or Quicksilver High Performance Gear Lubricant.

CHECKING LUBRICANT LEVEL AND REFILLING GEARCASE

1. Place the outboard in a vertical operating position.

2. Remove the vent plug/sealing washer.
3. Remove the fill/drain plug. Place the lubricant tube into the fill hole and add the lubricant until it appears at the vent hole.

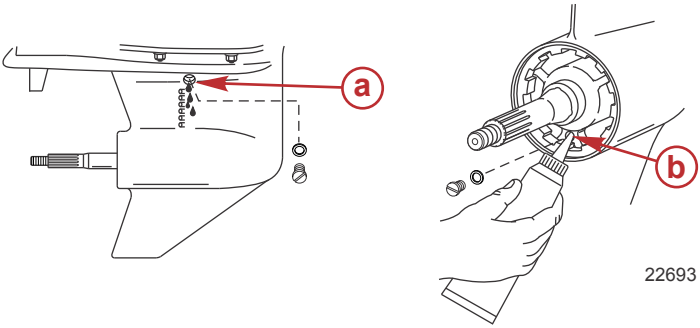

a - Vent hole
b - Fill hole

IMPORTANT: Replace the sealing washers if damaged.

4. Stop adding the lubricant. Install the vent plug and sealing washer before removing the lubricant tube.
5. Remove the lubricant tube and install cleaned fill/drain plug and sealing washer.

STORAGE

Storage Preparation

The major consideration in preparing your outboard for storage is to protect it from rust, corrosion, and damage caused by freezing of trapped water.

The following storage procedures should be followed to prepare your outboard for out of season storage or prolonged storage (two months or longer).

NOTICE
Without sufficient cooling water, the engine, the water pump, and other components will overheat and suffer damage. Provide a sufficient supply of water to the water inlets during operation.

FUEL SYSTEM

IMPORTANT: Gasoline containing alcohol (ethanol or methanol) can cause a formation of acid during storage and can damage the fuel system. If the gasoline being used contains alcohol, it is advisable to drain as much of the remaining gasoline as possible from the fuel tank, remote fuel line, and engine fuel system.

IMPORTANT: This outboard is equipped with a closed fuel system when the engine is not running. With this closed system, fuel within the engine's fuel system, other than the fuel tank, will remain stable during normal storage periods without the addition of fuel treatment stabilizers.

Fill the fuel tank and engine fuel system with treated (stabilized) fuel to help prevent formation of varnish and gum. Proceed with the following instructions.

- Portable fuel tank - Pour the required amount of Quickstor Fuel Stabilizer (follow instructions on container) into fuel tank. Tip fuel tank back and forth to mix stabilizer with the fuel.
- Permanently installed fuel tank - Pour the required amount of Quickstor Fuel Stabilizer (follow instructions on container) into a separate container and mix with approximately one liter (one quart) of gasoline. Pour this mixture into fuel tank.

Tube Ref No.	Description	Where Used	Part No.
124	Quickstor Fuel Stabilizer	Fuel tank	92-8M0047932

Protecting External Outboard Components

- Touch up any paint nicks. See your dealer for touch-up paint.
- Spray Quicksilver or Mercury Precision Lubricants Corrosion Guard on external metal surfaces (except corrosion control anodes).

Tube Ref No.	Description	Where Used	Part No.
120	Corrosion Guard	External metal surfaces	92-802878 55

STORAGE

Protecting Internal Engine Components

IMPORTANT: Refer to Maintenance - Spark Plug Inspection and Replacement for correct procedure for removing spark plugs.

- Change the engine oil and filter.
- Remove the spark plugs.
- Spray approximately 30 ml (1 fl oz) of Storage Seal Rust Inhibitor into each spark plug hole.

Tube Ref No.	Description	Where Used	Part No.
119	Storage Seal Rust Inhibitor	Spark plug holes	92-858081K03

- Actuate key/push button start switch to crank the engine through one start cycle, which will distribute the storage seal throughout the cylinders.
- Install the spark plugs.

Gearcase

- Drain and refill the gearcase lubricant (refer to **Gearcase Lubricant**).

Positioning Outboard for Storage

Store outboard in an upright (vertical) position to allow water to drain out of the outboard.

NOTICE

Storing the outboard in a tilted position can damage the outboard. Water trapped in the cooling passages or rain water collected in the propeller exhaust outlet in the gearcase can freeze. Store the outboard in the full down position.

Battery Storage

- Follow the battery manufacturer's instructions for storage and charging.
- Remove the battery from the boat and check water level. Charge if necessary.
- Store the battery in a cool, dry place.
- Periodically check the water level and charge the battery during storage.

TROUBLESHOOTING

Starter Motor Will Not Crank the Engine

POSSIBLE CAUSES

- Lanyard stop switch not in RUN position.
- Blown 15-amp fuse. Check 14-pin remote control harness/cowl trim switch/main power relay fuse. Refer to **Maintenance** section.
- Outboard is not shifted to neutral position.
- Weak battery or battery connections are loose or corroded.
- Ignition key switch failure.
- Wiring or electrical connection faulty.
- Starter motor solenoid or slave solenoid failure.

Engine Will Not Start

POSSIBLE CAUSES

- Incorrect starting procedure. Refer to **Operation** section.
- Old or contaminated gasoline.
- Fuel is not reaching the engine.
  - Fuel tank is empty.
  - Fuel tank vent not open or restricted.
  - Fuel line is disconnected or kinked.
  - Fuel filter is obstructed. Refer to **Maintenance** section.
  - Fuel pump failure.
  - Fuel tank filter obstructed.
- Ignition system component failure.
- Spark plugs fouled or defective. Refer to **Maintenance** section.

Engine Runs Erratically

POSSIBLE CAUSES

- Overheating - Warning horn not working.
- Low oil pressure. Check oil level.
- Spark plugs fouled or defective. Refer to **Maintenance** section.
- Incorrect setup and adjustments.
- Fuel is being restricted to the engine.
  a. Engine fuel filter is obstructed. Refer to **Maintenance** section.
  b. Fuel tank filter obstructed.
  c. Stuck antisiphon valve located on permanently built-in type fuel tanks.
  d. Fuel line is kinked or pinched.
- Fuel pump failure.

- Ignition system component failure.

Performance Loss

POSSIBLE CAUSES

- Overheating - Warning horn not working.
- Low oil pressure. Check oil level.
- Throttle not opening fully.
- Damaged propeller or improper propeller size.
- Incorrect engine timing, adjustment, or setup.
- Boat overloaded or load improperly distributed.
- Excessive water in bilge.
- Boat bottom is dirty or damaged.

Battery Will Not Hold Charge

POSSIBLE CAUSES

- Battery connections are loose or corroded.
- Low electrolyte level in battery.
- Worn out or inefficient battery.
- Excessive use of electrical accessories.
- Defective rectifier, alternator, or voltage regulator.
- Open circuit in the alternator output wire (fused link).

OWNER SERVICE ASSISTANCE

Service Assistance

LOCAL REPAIR SERVICE

If you need service for your Mercury-outboard-powered boat, take it to your authorized dealer. Only authorized dealers specialize in Mercury products and have factory-trained mechanics, special tools and equipment, and genuine Quicksilver parts and accessories to properly service your engine.

NOTE: *Quicksilver parts and accessories are engineered and built by Mercury Marine specifically for your power package.*

SERVICE AWAY FROM HOME

If you are away from your local dealer and the need arises for service, contact the nearest authorized dealer. If, for any reason, you cannot obtain service, contact the nearest Regional Service Center. Outside the United States and Canada, contact the nearest Marine Power International Service Center.

STOLEN POWER PACKAGE

If your power package is stolen, immediately advise the local authorities and Mercury Marine of the model and serial numbers and to whom the recovery is to be reported. This information is maintained in a database at Mercury Marine to aid authorities and dealers in the recovery of stolen power packages.

ATTENTION REQUIRED AFTER SUBMERSION

1. Before recovery, contact an authorized Mercury dealer.
2. After recovery, immediate service by an authorized Mercury dealer is required to reduce the possibility of serious engine damage.

REPLACEMENT SERVICE PARTS

⚠ WARNING

Avoid fire or explosion hazard. Electrical, ignition, and fuel system components on Mercury Marine products comply with federal and international standards to minimize risk of fire or explosion. Do not use replacement electrical or fuel system components that do not comply with these standards. When servicing the electrical and fuel systems, properly install and tighten all components.

Marine engines are expected to operate at or near full throttle for most of their lives. They are also expected to operate in both fresh and saltwater environments. These conditions require numerous special parts.

PARTS AND ACCESSORIES INQUIRIES

Direct any inquiries concerning genuine Mercury Precision Parts® or Quicksilver Marine Parts and Accessories® to a local authorized dealer. Dealers have the proper systems to order parts and accessories, if they are not in stock. **Engine model** and **serial number** are required to order correct parts.

OWNER SERVICE ASSISTANCE

RESOLVING A PROBLEM

Satisfaction with your Mercury product is important to your dealer and to us. If you ever have a problem, question or concern about your power package, contact your dealer or any authorized Mercury dealership. If you need additional assistance:

1. Talk with the dealership's sales manager or service manager.
2. If your question, concern, or problem cannot be resolved by your dealership, please contact the Mercury Marine Service Office for assistance. Mercury Marine will work with you and your dealership to resolve all problems.

The following information will be needed by the Customer Service:

- Your name and address
- Your daytime telephone number
- The model and serial numbers of your power package
- The name and address of your dealership
- The nature of the problem

CONTACT INFORMATION FOR MERCURY MARINE CUSTOMER SERVICE

For assistance, call, fax, or write to the geographic office in your area. Please include your daytime telephone number with mail and fax correspondence.

United States, Canada		
Telephone	English +1 920 929 5040 Français +1 905 636 4751	Mercury Marine W6250 Pioneer Road P.O. Box 1939 Fond du Lac, WI 54936-1939
Fax	English +1 920 929 5893 Français +1 905 636 1704	
Website	www.mercurymarine.com	

Australia, Pacific		
Telephone	+61 3 9791 5822	Brunswick Asia Pacific Group 41–71 Bessemer Drive Dandenong South, Victoria 3175 Australia
Fax	+61 3 9706 7228	

Europe, Middle East, Africa		
Telephone	+32 87 32 32 11	Brunswick Marine Europe Parc Industriel de Petit-Rechain B-4800 Verviers, Belgium
Fax	+32 87 31 19 65	

OWNER SERVICE ASSISTANCE

Mexico, Central America, South America, Caribbean		
Telephone	+1 954 744 3500	Mercury Marine 11650 Interchange Circle North Miramar, FL 33025 U.S.A.
Fax	+1 954 744 3535	

Japan		
Telephone	+072 233 8888	Kisaka Co., Ltd. 4-130 Kannabecho, Sakai-ku Sakai-shi, Osaka 590-0984, Japan
Fax	+072 233 8833	

Asia, Singapore		
Telephone	+65 65466160	Brunswick Asia Pacific Group T/A Mercury Marine Singapore Pte Ltd 29 Loyang Drive Singapore, 508944
Fax	+65 65467789	

Ordering Literature

Before ordering literature, have the following information about your power package available:

Model		Serial Number	
Horsepower		Year	

UNITED STATES AND CANADA

For additional literature for your Mercury Marine power package, contact your nearest Mercury Marine dealer or contact:

Mercury Marine		
Telephone	**Fax**	**Mail**
(920) 929-5110 (USA only)	(920) 929-4894 (USA only)	Mercury Marine Attn: Publications Department P.O. Box 1939 Fond du Lac, WI 54936-1939

OUTSIDE THE UNITED STATES AND CANADA

Contact your nearest Mercury Marine authorized service center to order additional literature that is available for your particular power package.

OWNER SERVICE ASSISTANCE

Submit the following order form with payment to:	Mercury Marine Attn: Publications Department W6250 Pioneer Road P.O. Box 1939 Fond du Lac, WI 54936-1939
Ship To: (Copy this form and print or type–This is your shipping label)	
Name	
Address	
City, State, Province	
ZIP or postal code	
Country	

Quantity	Item	Stock Number	Price	Total
			.	.
			.	.
			.	.
			.	.
			.	.
			Total Due	.

Mercury Marine Validated Engine Mounting Hardware

IMPORTANT: Mercury Marine provides validated fasteners and installation instructions, including torque specifications, with all of our outboards so they can be properly secured to boat transoms. Improper installation of the outboard can cause performance and reliability issues that can lead to safety concerns. Follow all of the instructions relating to the outboard installation. DO NOT mount any other accessory onto the boat with the fasteners provided with the outboard. For example, do not mount tow sport bars or boarding ladders onto the boat using the mounting hardware included with the outboard. Installing other products onto the boat that utilize the outboard mounting hardware will compromise the ability of that hardware to properly and safely secure the outboard to the transom.

Outboards that require validated mounting hardware will have the following decal on the transom clamp.

51965

Accessories Mounted to the Transom Clamp Bracket

Mercury Marine has been made aware that certain aftermarket marine accessories, such as emergency boarding ladders, shallow water anchors, transom wedge kits, and tow sport attaching devices, have been mounted to the boat by use of the same fasteners that secure the outboard to the transom or jack plate. Using the same fastener to secure both an accessory and the engine to the boat compromises the ability of the fasteners to maintain the proper clamp load. A boat with loose engine mounting fasteners creates the possibility of performance, durability, and safety issues.

⚠ WARNING

Avoid serious injury or death resulting from a loss of boat control. Loose engine fasteners could cause the transom bracket to fail, resulting in a loss of the driver's ability to control the boat. Always ensure that the engine fasteners are tightened to the specified torque.

ACCEPTABLE ACCESSORY MOUNTING TO THE TRANSOM CLAMP BRACKET

After the engine is mounted to the transom or jack plate in accordance with the engine installation instructions, it is acceptable to attach an accessory to the boat by use of the unused bolt holes in the transom clamp bracket as shown in Figure 1.

The following list provides additional guidelines for mounting accessories to the transom clamp bracket.

- The accessory fasteners must pass through the boat transom or jack plate.

- The installation must not create interference issues, as would an accessory mounting plate resting in the radius of the transom clamp bracket. Refer to Figure 1.

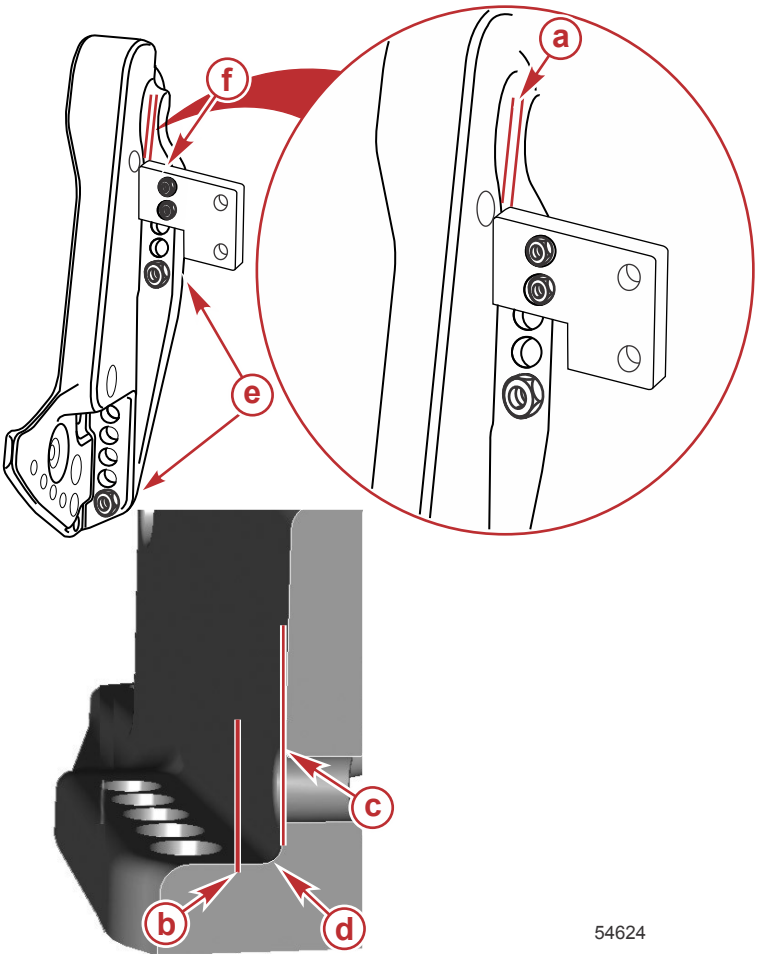

Figure 1

a - Minimum clearance 3.175 mm (0.125 in.)
b - Edge of accessory bracket
c - Transom clamp bracket wall
d - Radius
e - Engine supplied mounting fasteners
f - Fasteners supplied by the accessory manufacturer installed through unused engine mounting bracket holes

UNACCEPTABLE ACCESSORY MOUNTING

IMPORTANT: Do not use the fasteners that secure the engine to the boat (either the transom or the jack plate) for any purpose other than securing the engine to the boat.

1. Do not mount an accessory to the transom clamp bracket in an unsupported condition. Refer to Figure 2.

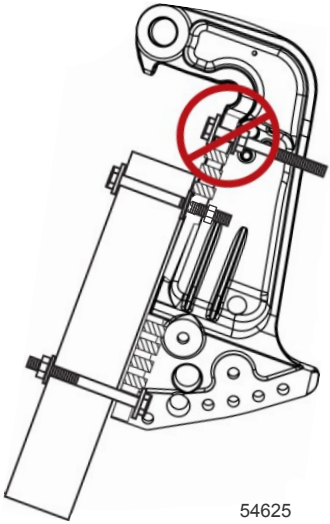

Figure 2

2. Do not attach an accessory to the boat by use of the engine mounting hardware. Refer to Figure 3.

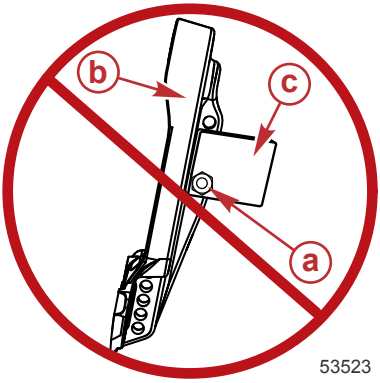

Figure 3

a - Engine supplied mounting fasteners

b - Transom clamp bracket

c - Accessory

3. Do not install wedges or plates between the transom clamp brackets and the transom (or jack plate). Refer to Figure 4.

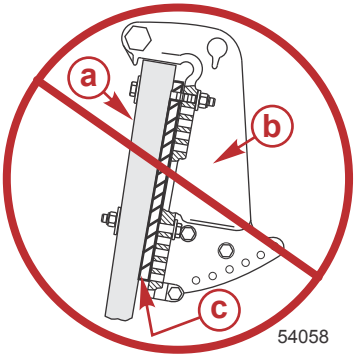

Figure 4
a - Boat transom or jack plate
b - Transom clamp bracket
c - Wedge/plate

Important Information

Rigging boats, which includes proper engine installation has become more complex over the years. As a result, Mercury Marine recommends that engines be installed only by Mercury authorized dealers. If you intend to disregard this recommendation, and install the engine yourself, please make sure to read and comply with these instructions. Failure to comply with these installation instructions could lead to serious injury or death.

NOTE: *Do not install an accessory electric fuel pump onto the fuel system for this engine.*

Boat Horsepower Capacity

⚠ WARNING

Exceeding the boat's maximum horsepower rating can cause serious injury or death. Overpowering the boat can affect boat control and flotation characteristics or break the transom. Do not install an engine that exceeds the boat's maximum power rating.

Do not overpower or overload your boat. Most boats will carry a required capacity plate indicating the maximum acceptable power and load as determined by the manufacturer following certain federal guidelines. If in doubt, contact your dealer or the boat manufacturer.

U.S. COAST GUARD CAPACITY	
MAXIMUM HORSEPOWER	XXX
MAXIMUM PERSON CAPACITY (POUNDS)	XXX
MAXIMUM WEIGHT CAPACITY	XXX

26777

Start in Gear Protection

⚠ WARNING

Starting the engine with the drive in gear can cause serious injury or death. Never operate a boat that does not have a neutral-safety-protection device.

The remote control connected to the outboard must be equipped with a start in neutral only protection device. This prevents the engine from starting in gear.

Selecting Accessories for Your Outboard

Genuine Mercury Precision or Quicksilver Accessories have been specifically designed and tested for this outboard.

Some accessories not manufactured or sold by Mercury Marine are not designed to be safely used with this outboard or outboard operating system. Acquire and read the installation, operation, and maintenance manuals for all selected accessories.

Fuel System

ACCESSORY ELECTRIC FUEL PUMP

IMPORTANT: Do not install an accessory electric fuel pump onto the fuel system for this engine.

AVOIDING FUEL FLOW RESTRICTION

IMPORTANT: Adding components to the fuel supply system (filters, valves, fittings, etc.) may restrict the fuel flow. This may cause engine stalling at low speed, and/or a lean fuel condition at high RPM that could cause engine damage.

LOW PERMEATION FUEL HOSE REQUIREMENT

Required for outboards manufactured for sale, sold, or offered for sale in the United States.

- The Environmental Protection Agency (EPA) requires that any outboard manufactured after January 1, 2009, must use low permeation fuel hose for the primary fuel hose connecting the fuel tank to the outboard.
- Low permeation hose is USCG Type B1-15 or Type A1-15, defined as not exceeding 15 g/m²/24 h with CE 10 fuel at 23 °C as specified in SAE J 1527 - marine fuel hose.

EPA PRESSURIZED PORTABLE FUEL TANK REQUIREMENTS

The Environmental Protection Agency (EPA) requires portable fuel systems that are produced after January 1, 2011, for use with outboard engines to remain fully sealed (pressurized) up to 34.4 kPa (5.0 psi). These tanks may contain the following:

- An air inlet that opens to allow air to enter as the fuel is drawn out of the tank.
- An air outlet that opens (vents) to the atmosphere if pressure exceeds 34.4 kPa (5.0 psi).

FUEL DEMAND VALVE (FDV) REQUIREMENT

Whenever a pressurized fuel tank is used, a fuel demand valve is required to be installed in the fuel hose between the fuel tank and the engine. The fuel demand valve prevents pressurized fuel from entering the engine and causing a fuel system overflow or possible fuel spillage.

The fuel demand valve has a manual release. The manual release can be used (pushed in) to open (bypass) the valve in case of a fuel blockage in the valve.

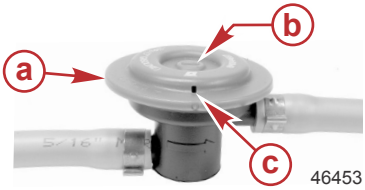

a - Fuel demand valve - installed in the fuel hose between the fuel tank and the engine
b - Manual release
c - Vent/water drain holes

FUEL TANKS

Portable Fuel Tank

Select a suitable location in the boat within the engine fuel line length limitations and secure the tank in place.

Permanent Fuel Tank

Permanent fuel tanks should be installed in accordance with industry and federal safety standards, which include recommendations applicable to grounding, antisiphon protection, ventilation, etc.

FUEL SUPPLY MODULE PRIMING PROCEDURE

The fuel supply module (FSM) is not vented to the ambient air. The air trapped in the FSM, fuel lines, and fuel rail, will be slightly compressed during the initial ignition key on with a dry or drained fuel system. Additional key on events under these conditions, will not compress the air further to finish the priming of the FSM. Excessive number of key on events may eventually damage the fuel pumps. The volume of air trapped in the FSM must be purged to prime the fuel system. This can be achieved by connecting a tool to the fuel rail Schrader valve fitting to quickly purge the system into an approved container, or by cranking the engine.

Priming the FSM with a Fuel Pressure Gauge

The use of a purge tool for priming the FSM is the preferred method, but is not always practical. The objective is to purge the air entrained in the fuel system through a purge tool connected to the fuel rail Schrader valve test port. During the key on, opening the dump valve will allow the air to be purged from the FSM and fuel rail. This method should be used on vessels where the fuel inlet system to the outboard is restrictive; contains an anti-siphon valve or holds a relatively large volume of fuel because of a long fuel supply line or water separating fuel filter. If a primer bulb is installed, it can be used during the priming event to shorten the amount of time required to start the engine.

1. Verify the engine is in a level vertical position.
2. Verify the vessel fuel supply line is connected to the outboard fuel system inlet fitting.
3. Connect a fuel pressure gauge to the fuel rail Schrader valve.

Fuel Pressure Gauge Kit	91-881833A03
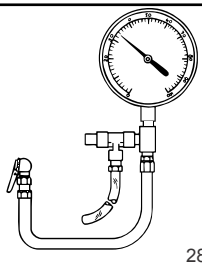 2807	Tests the fuel pump pressure; can be used to relieve fuel pressure.

4. Secure the fuel pressure gauge purge hose into an appropriate fuel container to collect excess fuel.

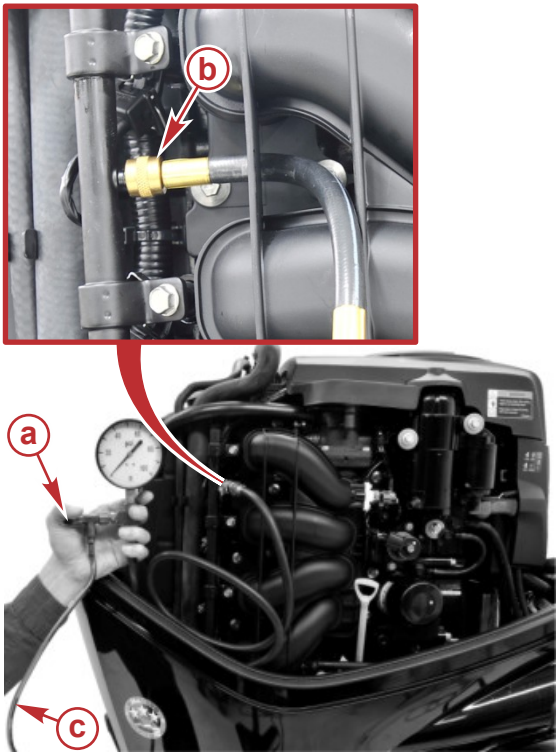

58336

a - Fuel pressure gauge purge valve
b - Schrader valve
c - Purge hose to appropriate container

5. Open the fuel pressure gauge purge valve and turn the ignition key on. The fuel pumps will run for approximately three to five seconds.
6. Turn the ignition key off and then on. The fuel pumps will run for approximately three to five seconds. Continue this ignition key cycle until the purged fuel is relatively clear of air bubbles.

NOTE: *If the outboard fuel system does not prime within 15 key on events, check for leaks in the fuel supply line to the outboard. Repair as needed. If no leak is found, the fuel supply system to the outboard may be too restrictive. Correct the condition and try again.*

7. Remove the fuel pressure gauge.

8. Turn the ignition key on. When the fuel pumps stop running, start the engine. The engine may not start on the first attempt. The engine will run rough at idle for up to two minutes while the residual air is purged from the fuel system.

Priming the FSM (Ran out of Fuel Condition)

The use of a purge tool for priming the FSM is the preferred method, but is not always practical. When the vessel fuel system is void of fuel volume, it can be primed without the use of a purge tool. The objective is to purge the air entrained in the fuel system through the fuel injectors during engine cranking to allow fuel to enter the fuel module. This method can be used on vessels where the fuel inlet system to the outboard is less restrictive and holds a relatively small volume of fuel; a short fuel supply line, no water separating fuel filter, or a water separating fuel filter is already primed. If a primer bulb is installed, it can be used during the priming event to shorten the amount of time required to start the engine.

1. Verify the engine is in a level vertical position.
2. Verify the vessel fuel supply line is connected to the outboard fuel system inlet fitting.
3. Turn the ignition key on. The fuel pumps will run for approximately three to five seconds.
4. Turn the ignition key to the start position and release the key. The ECM controls the activation of the starter. The starter may continue cranking for up to eight seconds.

NOTE: *When priming a drained fuel system, residual fuel may cause the engine to flare and stall which shortens the engine cranking event.*

5. Continue with the ignition key on and start sequence until the engine continues to run.

IMPORTANT: Allow the starter motor to cool for 20 to 30 seconds between full eight second crank events. Limit the number of events to a maximum of 10 full eight second cranking events.

6. After the engine starts, it may run rough at idle for up to two minutes while the residual air is purged from the fuel system.
7. If the fuel system will not prime within 10 full eight second cranking events, use the previous procedure **Priming the FSM with a Fuel Pressure Gauge** to prime the fuel system.

Installation Specifications

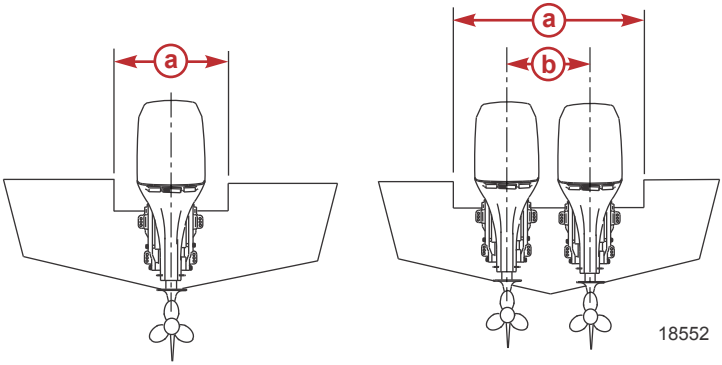

a - Minimum transom opening
b - Engine centerline for dual engine - 66.0 cm (26 in.) minimum

Minimum Transom Opening	
Single engine	84.2 cm (33 in.)
Dual engine	149.9 cm (59 in.)

OUTBOARD INSTALLATION

Determining Recommended Outboard Mounting Height

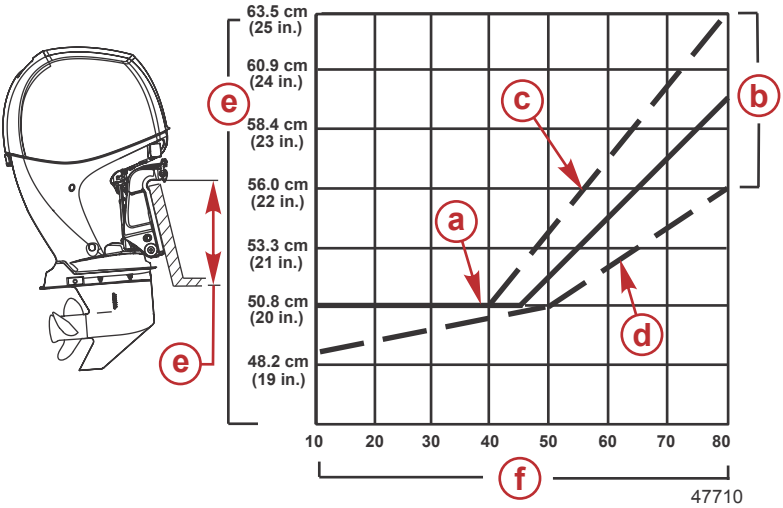

a - The solid line is recommended to determine the outboard mounting height

b - The broken lines represent the extremes of known successful outboard mounting height dimensions

c - This line may be preferred to determine outboard mounting height dimension, if maximum speed is the only objective

d - This line may be preferred to determine outboard mounting height dimension for dual outboard installation

e - Outboard mounting height (height of outboard mounting brackets from bottom of boat transom). For heights over 56.0 cm (22 in.), a propeller that is designed for surfacing operation is usually preferred.

f - Maximum boat speed (MPH) anticipated

NOTICE
1. The outboard should be mounted high enough on the transom so the exhaust relief hole will stay at least 25.4 mm (1 in.) above the waterline when the engine is running at idle speed. Having the exhaust relief hole above the waterline will prevent exhaust restrictions. Exhaust restrictions will result in poor performance at idle.
2. Add 12.7 cm (5 in.) for XL models to the listed outboard mounting heights.
3. The mounting height of the outboard must not exceed 63.5 cm (25 in.) for L models, 76 cm (30 in.) for XL models. Mounting the outboard higher may cause damage to the gearcase components.

Increasing the mounting height will usually:

- Reduce steering torque
- Increase top speed
- Increase boat stability
- Cause propeller to break loose during planing

Drilling Outboard Mounting Holes

IMPORTANT: Before drilling any mounting holes, carefully read Determining Recommended Outboard Mounting Height and install outboard to the nearest recommended mounting height.

1. Mark four mounting holes on the transom using the transom drilling fixture.

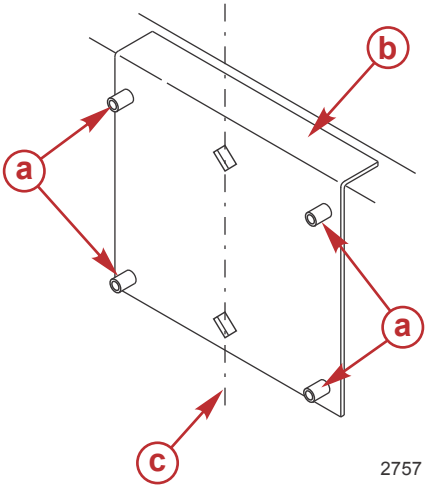

a - Drill guide holes
b - Transom drilling fixture
c - Transom centerline

Transom Drilling Fixture	91-98234A2
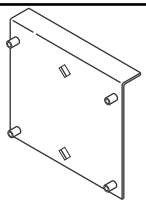 5489	Aids in engine installation by acting as a template for engine mounting holes.

2. Drill four 13.5 mm (17/32 in.) mounting holes.

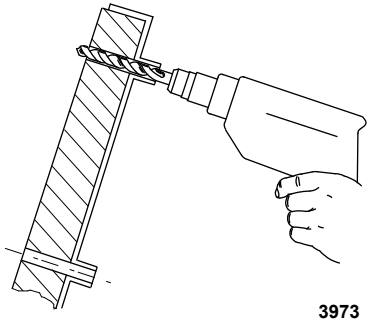

Lifting Outboard

1. Remove the top cowl.
2. Install the lifting base to the flywheel using three bolts. Tighten the bolts securely.
3. Thread the lifting eye into the lifting base.
4. Connect a hoist that has a minimum lift capacity of 450 kg (1000 lb) to the lifting eye.
5. Lift the outboard and place it on the transom.

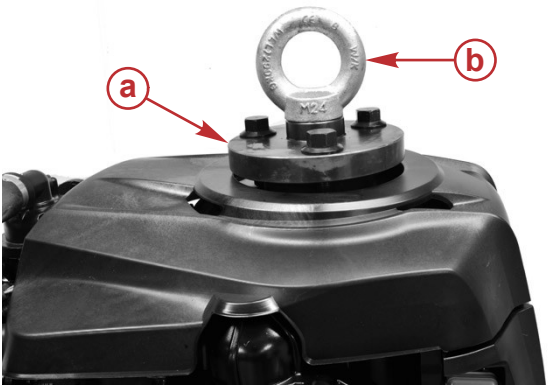

53797

a - Lifting base
b - Lifting eye

Flywheel Puller/Lifting Ring	91-895343T02
14869	Removes flywheel from engine. Used for lifting powerhead/engine.

Shipping Bracket Removal

1. Remove the two top screws and loosen the two bottom screws.
2. Slide the shipping bracket off the bottom screws.
3. Tighten the bottom screws to the specified torque.

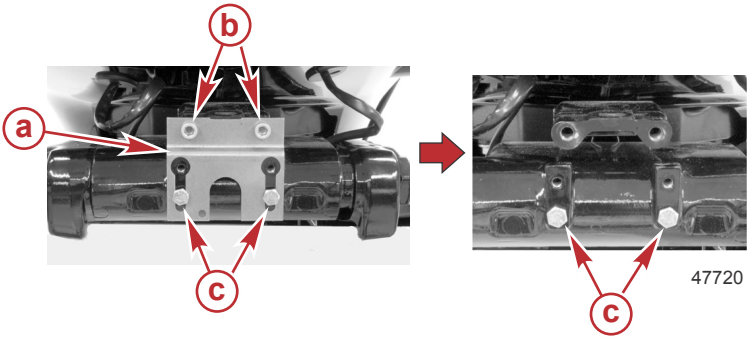

a - Shipping bracket
b - Top screws
c - Bottom screws

Description	Nm	lb-in.	lb-ft
Bottom screws	7.9	70	–

Steering Cable - Starboard Side Routed Cable

1. Lubricate O-ring seal and entire cable end.

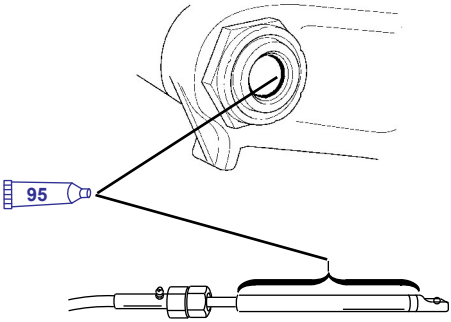

3724

Tube Ref No.	Description	Where Used	Part No.
95	2-4-C with PTFE	O-ring seal and entire cable end	92-802859A 1

2. Insert steering cable into tilt tube.
3. Tighten the nut to the specified torque.

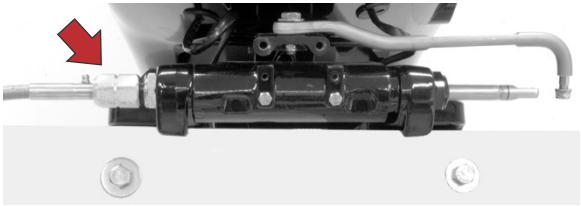

47708

Description	Nm	lb-in.	lb-ft
Nut	47.5	–	35

Fastening the Outboard to the Transom

MOUNTING BOLTS

Outboard Transom Mounting Hardware - Supplied with Outboard		
Part Number	Part Name	Description
67755-1	Outboard mounting bolt	½-20 x 4.50 in. long (2.25 in. thread)
826711-17	Nylon insert locknut	½-20
28421	Flat washer	1.50 in. diameter
54012	Flat washer	0.875 in. diameter

Available Outboard Mounting Bolts	
Part Number	Description
67755005	½-20 x 2.50 in. long (1.25 in. thread)
67755006	½-20 x 3.50 in. long (1.25 in. thread)
814259	½-20 x 4.00 in. long (2.25 in. thread)
67755-1	½-20 x 4.50 in. long (2.25 in. thread)
8M0033366	½-20 x 5.00 in. long (3.25 in. thread)
67755-003	½-20 x 5.50 in. long (3.25 in. thread)
67755-2	½-20 x 6.50 in. long (2.75 in. thread)
8M0028080	½-20 x 7.50 in. long (2.75 in. thread)
8M0032860	½-20 x 8.00 in. long (2.75 in. thread)

CHECKING BOAT TRANSOM CONSTRUCTION

IMPORTANT: Determine the strength of the boat transom. The outboard mounting locknuts and bolts should be able to hold 75 Nm (55 lb-ft) of torque without the boat transom yielding or cracking. If the boat transom yields or cracks under this torque, the construction of the transom may not be adequate. The boat transom must be strengthened or the load carrying area increased.

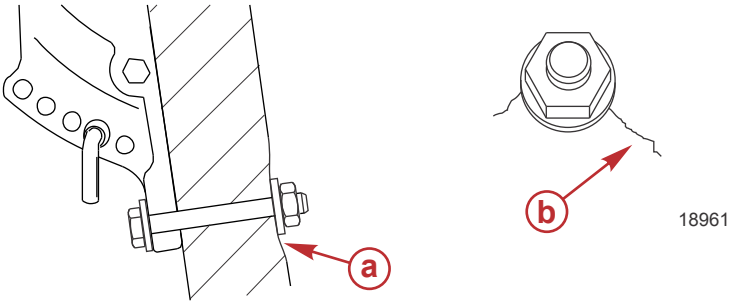

a - Transom yielding under bolt torque
b - Transom cracking under bolt torque

Use a dial torque wrench to determine transom strength. If the bolt or nut continues to turn without the torque reading on the dial increasing, it is an indication that the transom is yielding. The load area can be increased by using a larger washer or a transom reinforcement plate.

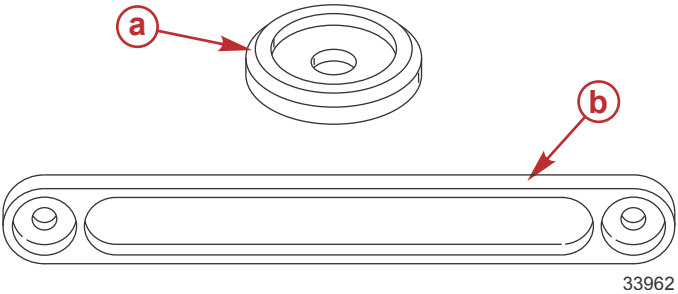

a - Large transom washer
b - Transom reinforcement plate

FASTENING THE OUTBOARD TO THE TRANSOM

IMPORTANT: The transom mounting surface must be flat within 3.17 mm (0.125 in.). No step in the transom mounting surface is allowed. The inside transom mounting bolt washer surface must be flat within 3.17 mm (0.125 in.).

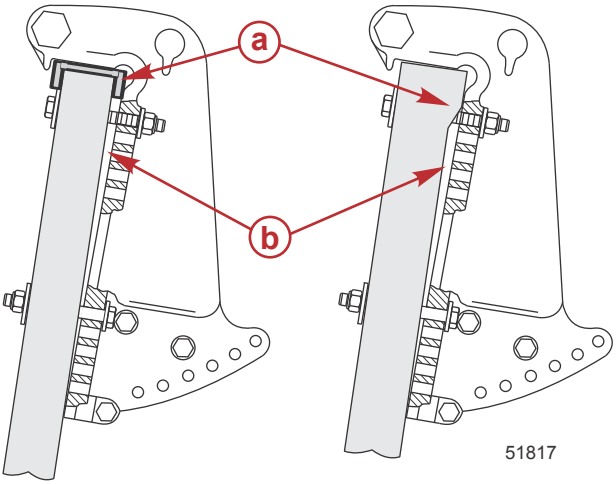

a - Step (not allowed)
b - Gap between transom clamp and boat transom (not allowed)

OUTBOARD INSTALLATION

IMPORTANT: Clearance must be maintained between the vessel transom and the outboard transom bracket relief radius area. Failure to maintain clearance may damage the transom bracket and cause the transom bracket to fail. Adjustments to the position of the Mercury Marine transom drilling fixture may be required to ensure proper clearance of the transom bracket relief radius area.

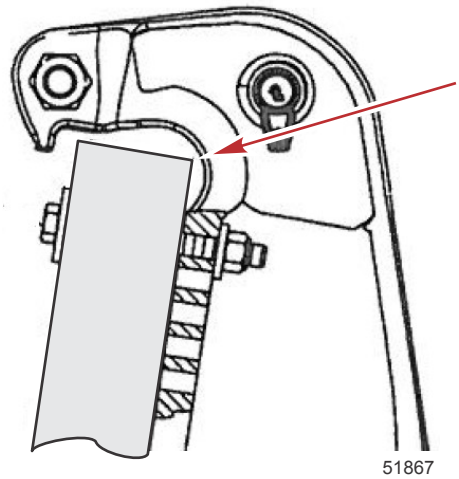

Installation

1. Apply marine sealer to the shanks of the bolts, not to the threads.
2. Fasten the outboard with the correct mounting hardware. Tighten the locknuts to the specified torque.

IMPORTANT: Ensure that a minimum of two full threads of the mounting bolts extend beyond the locknut after tightening. The locknut must be drawn tight while still engaging the bolt threads and not contacting the shank of the bolt.

OUTBOARD INSTALLATION

NOTE: *For a more accurate torque reading, tighten the mounting locknuts rather than the outboard mounting bolts.*

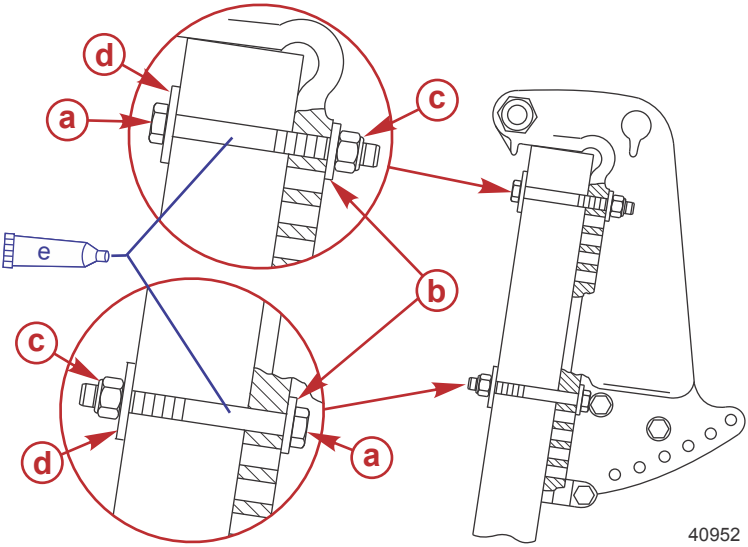

a - 0.500 in. diameter outboard mounting bolt (4)
b - 0.875 in. flat washer (4)
c - Nylon insert locknut (4)
d - 1.500 in. flat washer (4)
e - Marine sealer – apply to the shank of the bolts, not the threads

Description	Nm	lb-in.	lb-ft
Outboard mounting locknuts and bolts – standard boat transom	75	–	55
Outboard mounting locknuts and bolts – metal lift plates and setback brackets	122	–	90

A decal on the transom bracket reminds the owner to check the fasteners securing the outboard to the transom before each use.

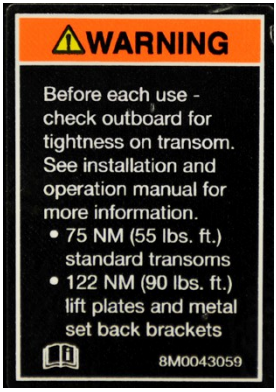

51985

Decal on the transom bracket

Steering Link Rod Fasteners (if equipped)

IMPORTANT: The steering link rod that connects the steering cable to the engine must be fastened using a special washer head bolt ("a" - Part Number 10-856680) and self-locking nylon insert locknuts ("c" and "d" - Part Number 11-826709113). These locknuts must never be replaced with common nuts (nonlocking) as they will work loose and vibrate off, freeing the link rod to disengage.

OUTBOARD INSTALLATION

⚠ WARNING

Improper fasteners or improper installation procedures can result in loosening or disengagement of the steering link rod. This can cause a sudden, unexpected loss of boat control, resulting in serious injury or death due to occupants being thrown within or out of the boat. Always use required components and follow instructions and torque procedures.

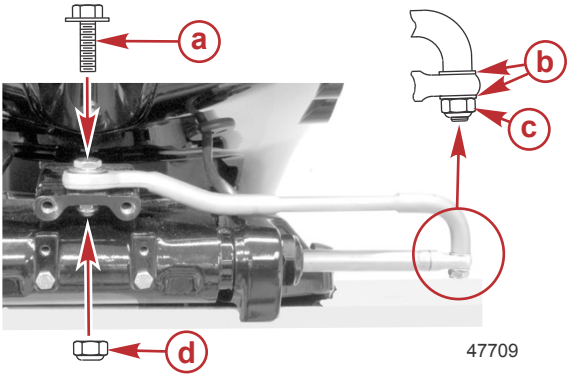

a - Special washer head bolt (10-856680)
b - Flat washers
c - Nylon insert locknut (11-826709113)
d - Nylon insert locknut (11-826709113)

Description	Nm	lb-in.	lb-ft
Special washer head bolt	27	–	20
Nylon insert locknut "d"	27	–	20
Nylon insert locknut "c"	Tighten until it seats, then back off 1/4 turn		

Assemble steering link rod to steering cable with two flat washers and nylon insert locknut. Tighten locknut until it seats, then back nut off 1/4 turn.

Assemble steering link rod to engine with special washer head bolt and locknut. First torque special washer head bolt, then torque locknut to specifications.

Electrical, Fuel Hose, and Control Cables

RIGGING GROMMET

Installation

IMPORTANT: Sufficient slack must exist in wiring harnesses, battery cables, and hoses, that are routed between the rigging grommet and engine attachment points, to relieve stress and prevent hoses from being kinked or pinched.

1. Route the hoses, wiring, and cables through the rigging adapter and correct opening in the rigging grommet as shown.

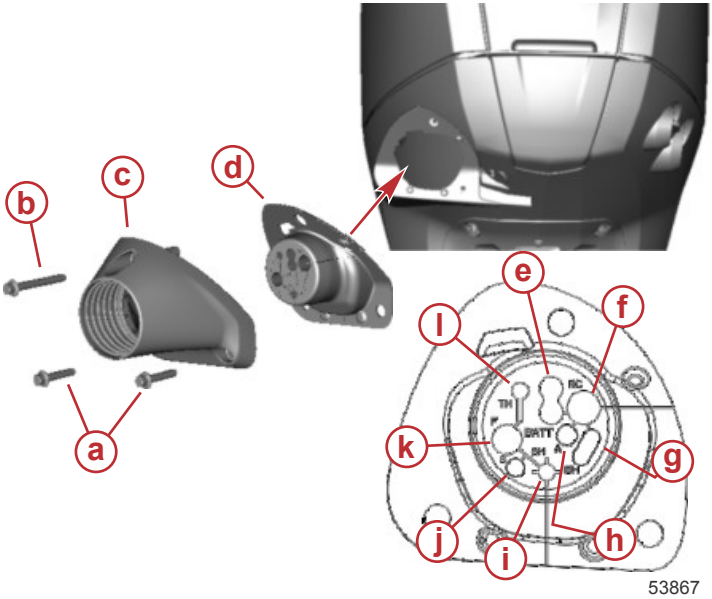

- **a -** Screws M6 x 30 (2)
- **b -** Screw M6 x 50
- **c -** Rigging adapter
- **d -** Rigging grommet
- **e -** Battery cable opening
- **f -** Remote 14 pin boat harness opening
- **g -** SmartCraft harness or additional harness opening
- **h -** Accessory harness opening
- **i -** Shift cable opening
- **j -** Speedometer tube opening
- **k -** Fuel hose opening
- **l -** Throttle cable opening

2. Fasten the rigging grommet and rigging adapter with two M6 x 30 screws and one M6 x 50 screw. Tighten the screws to the specified torque.
3. Secure the wiring, hoses, and cables together with a cable tie.

NOTICE
Inspect the position of the hose clamp located on the fuel hose to ensure that it will not chafe or cut into the adjacent wiring harnesses.

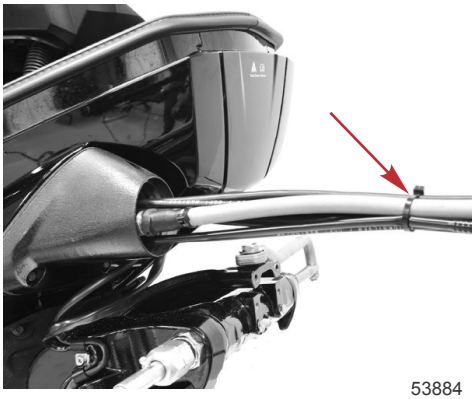

Cable tie

Description	Nm	lb-in.	lb-ft
Screws for attaching the rigging adapter	6	53	–

REMOTE WIRING HARNESS

Route the remote 14 pin boat harness through the rigging grommet. Remove the harness cover and connect the remote harness to the 14 pin connector on the engine harness. Secure the harness with the retainer.

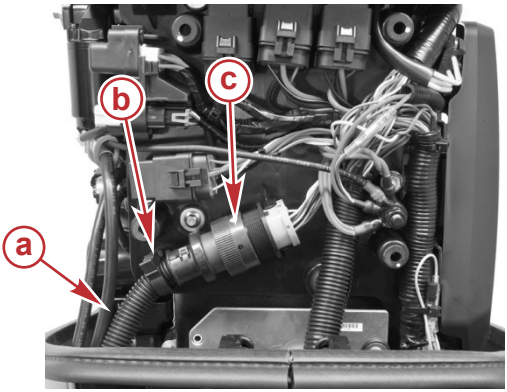

53886

a - Remote 14 pin boat harness
b - Retainer
c - 14 pin connector

SMARTCRAFT HARNESS AND VESSEL HARNESS CONNECTION

1. If the boat is equipped with a SmartCraft and/or vessel (accessory) harness, remove the ignition coil cover located on the port side of the engine.

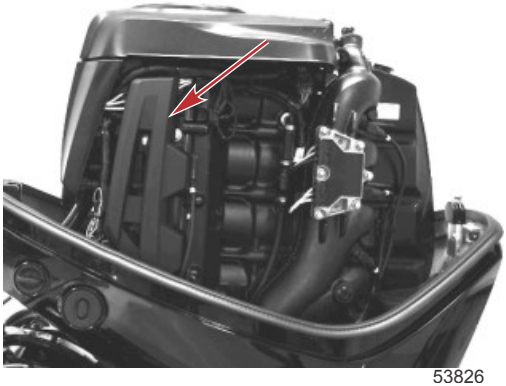

53826

2. Route the SmartCraft and/or vessel harness through the rigging grommet and connect it to the connector.

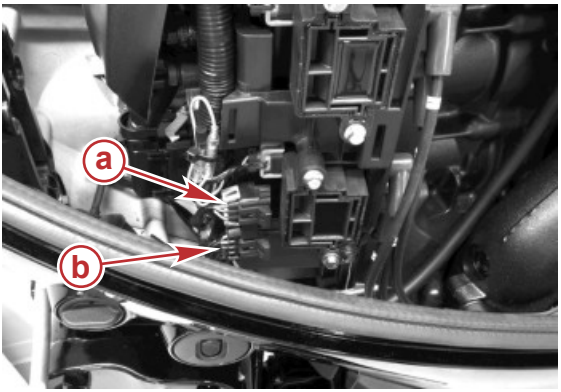

53857

a - Vessel (accessory) harness connector
b - SmartCraft harness connector

BATTERY CABLE CONNECTIONS

This outboard is factory equipped with 3.6 m (12 ft) #4 gauge battery cables.

If battery cables longer than the factory supplied cables are required, the wire gauge size must increase. Refer to the following chart for the correct gauge according to the length.

IMPORTANT: Only copper battery cables should be used. Do not use aluminum power cables in any marine installation.

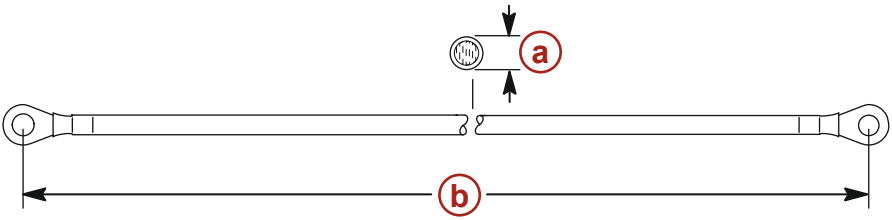

2758

a - Wire gauge size
b - Cable length

IMPORTANT: The battery cable length specified in the following chart is the sum of both positive and negative cables.

American Wire Gauge (AWG)	Maximum Length Meter (Feet)
2	12.2 m (40 ft)
1	15.2 m (50 ft)
1/0	19.6 m (64 ft)
2/0	24.4 m (80 ft)

Single Outboard

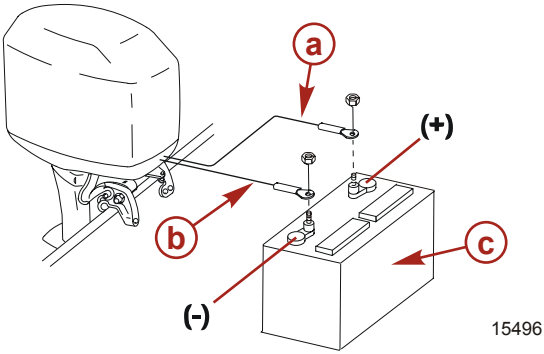

a - Red sleeve - positive (+)
b - Black sleeve - negative (–)
c - Cranking battery

Dual Outboards

Connect a common ground cable (wire size same as engine battery cables) between negative (–) terminals on starting batteries.

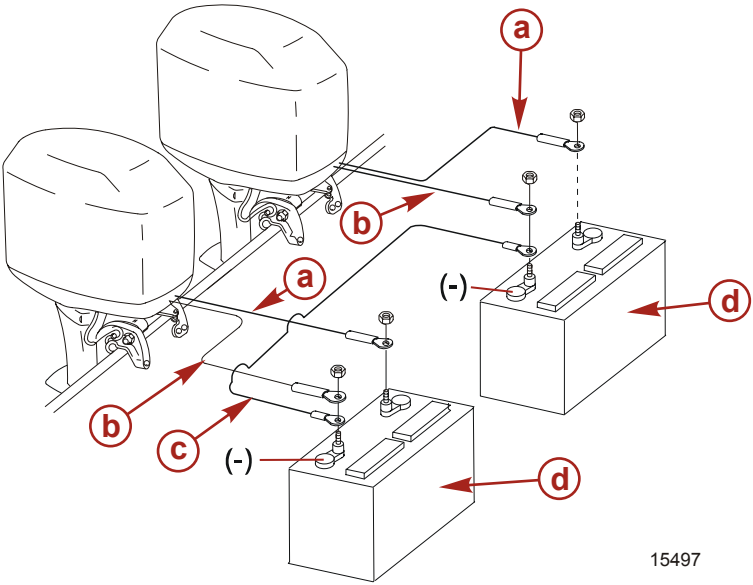

a - Red sleeve - positive (+)
b - Black sleeve - negative (–)
c - Ground cable
d - Cranking battery

FUEL HOSE CONNECTION

Install and secure the quick disconnect fuel hose fitting with a hose clamp. Position the hose clamp so that it will not chafe or cut into an adjacent wiring harness.

NOTICE
Inspect the position of the hose clamp to ensure that it will not chafe or cut into the adjacent wiring harnesses.

Fuel Hose Size

Minimum fuel hose inside diameter (ID) is 8 mm (5/16 in.) with separate fuel hose/fuel tank pickup for each engine.

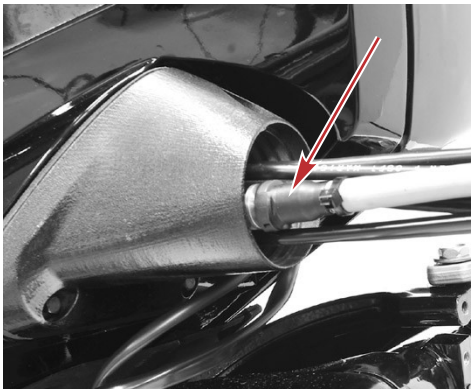

53883

Quick disconnect fuel hose fitting

SHIFT CABLE INSTALLATION

Install cables into the remote control following the instructions provided with the remote control.

NOTE: *Install the shift cable to the engine first. The shift cable is the first cable to move when the remote control handle is moved out of neutral.*

1. Position the remote control and outboard into neutral position.

2. Center the shift cable anchor pin with the neutral detent alignment mark.

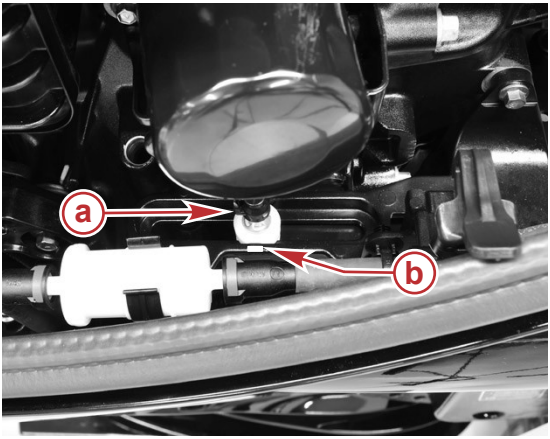

53873

a - Shift cable anchor pin
b - Neutral detent alignment mark

3. Locate the center point of the slack or lost motion that exists in the shift cable as follows:
   a. Move the remote control handle from neutral into forward and advance the handle to full speed position. Slowly return the handle back to the neutral position. Place a mark "a" on the cable against the cable end guide.
   b. Move the remote control handle from neutral into reverse and advance the handle to full speed position. Slowly return the handle back to the neutral position. Place a mark "b" on the cable against the cable end guide.

c. Make a center mark "c," midway between marks "a" and "b." Align the cable end guide against this center mark when installing the cable to the engine.

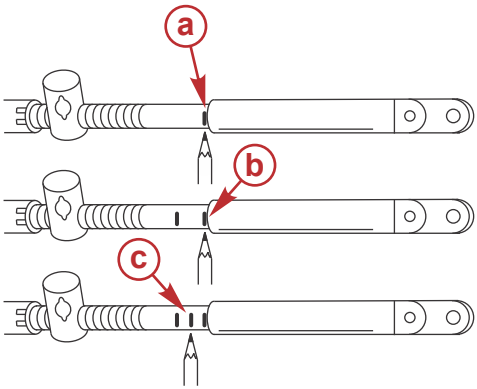

6098

4. Position the remote control into neutral.
5. Place the barrel cup into the barrel pocket.
6. Align the shift cable end guide with the center mark made in step 3. Place the shift cable on the anchor pin. Adjust cable barrel so it slips freely into the barrel cup.
7. Secure the shift cable to the anchor pin with the shift cable retainer.
8. Lock the barrel in place with the cable latch.

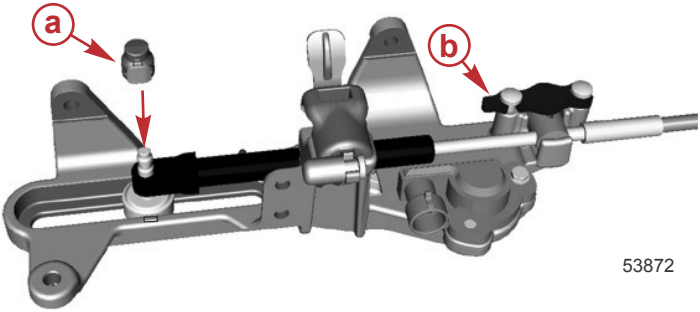

53872

a - Shift cable retainer
b - Cable latch

9. Check shift cable adjustments as follows:
   a. Shift remote control into forward. The propeller shaft should be locked in gear. If not, adjust the barrel closer to the cable end.
   b. Shift remote control into neutral. The propeller shaft should turn freely without drag. If not, adjust the barrel away from the cable end. Repeat steps a and b.

c. Shift remote control into reverse while turning propeller. The propeller shaft should be locked in gear. If not, adjust the barrel away from the cable end. Repeat steps a through c.

d. Shift remote control back to neutral. The propeller shaft should turn freely without drag. If not, adjust the barrel closer to the cable end. Repeat steps a through d.

THROTTLE CABLE INSTALLATION

Install cables into the remote control following the instructions provided with the remote control.

1. Shift remote control into the neutral (N) position.

2. Install the throttle cable onto the throttle cam anchor pin and secure with the anchor pin latch.
3. Adjust the cable barrel so that the throttle cam timing mark will align with the throttle lever.

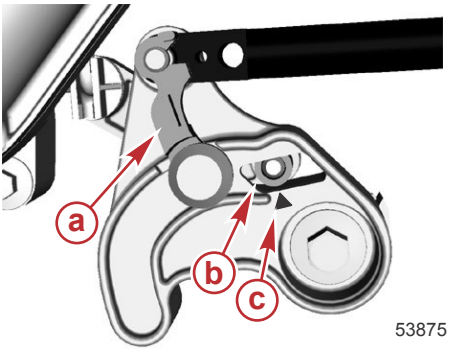

a - Anchor pin latch
b - Throttle lever
c - Throttle cam timing mark

4. Place the barrel cup onto the barrel. Place the cable barrel and barrel cup into the barrel retainer.

5. Lock the cable in place with the cable latch.

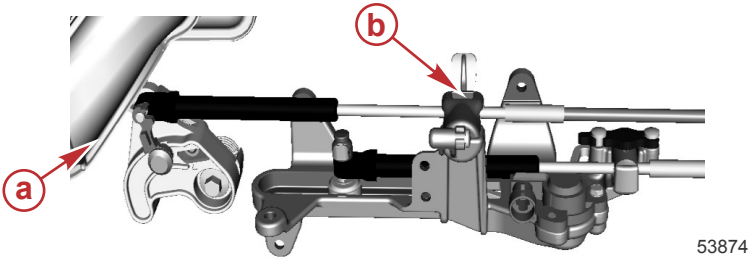

a - Anchor pin latch
b - Cable latch

6. Press on the cable latch to ensure the cable latch locks onto the bracket.
7. Pull up on the throttle cable near the cable latch to confirm the cable latch has locked onto the bracket.

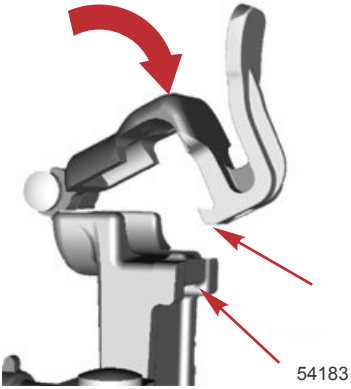

Trim In Pin

⚠ WARNING
Operating the boat at high speeds with the outboard trimmed too far under can create excessive bow steer, resulting in the operator losing control of the boat. Install the trim limit pin in a position that prevents excessive trim under and operate the boat in a safe manner.

Some boats, particularly some bass boats, are built with a greater than normal transom angle, which will allow the outboard to be trimmed further in or under. This greater trim under capability is desirable to improve acceleration, reduce the angle and time spent in a bow high boat during planing off, and in some cases, may be necessary to plane off a boat with aft livewells, given the variety of available propellers and height range of engine installations.

However, once on plane, the engine should be trimmed to a more intermediate position to avoid a bow-down planing condition called plowing. Plowing can cause bow steering or oversteering and inefficiently consumes horsepower.

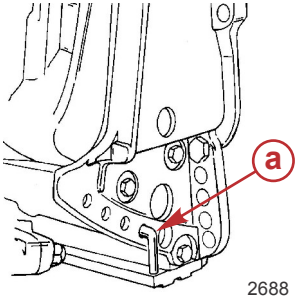

a - Tilt pin (not included with engine)

Stainless Steel Tilt Pin	17-49930A 1
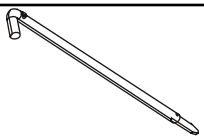 2749	Limits the down trim angle of the power trim equipped engines, or aids in determining the trim out angle on non-power trim engines.

The owner may decide to limit the trim in. This can be accomplished by purchasing a stainless steel tilt pin from your dealer and insert it in whatever adjustment hole in the transom brackets is desired. A nonstainless steel shipping bolt should not be used in this application other than on a temporary basis.

MAINTENANCE LOG

Maintenance Log

Record all maintenance performed on your outboard here. Be sure to save all work orders and receipts.

Date	Maintenance Performed	Engine Hours